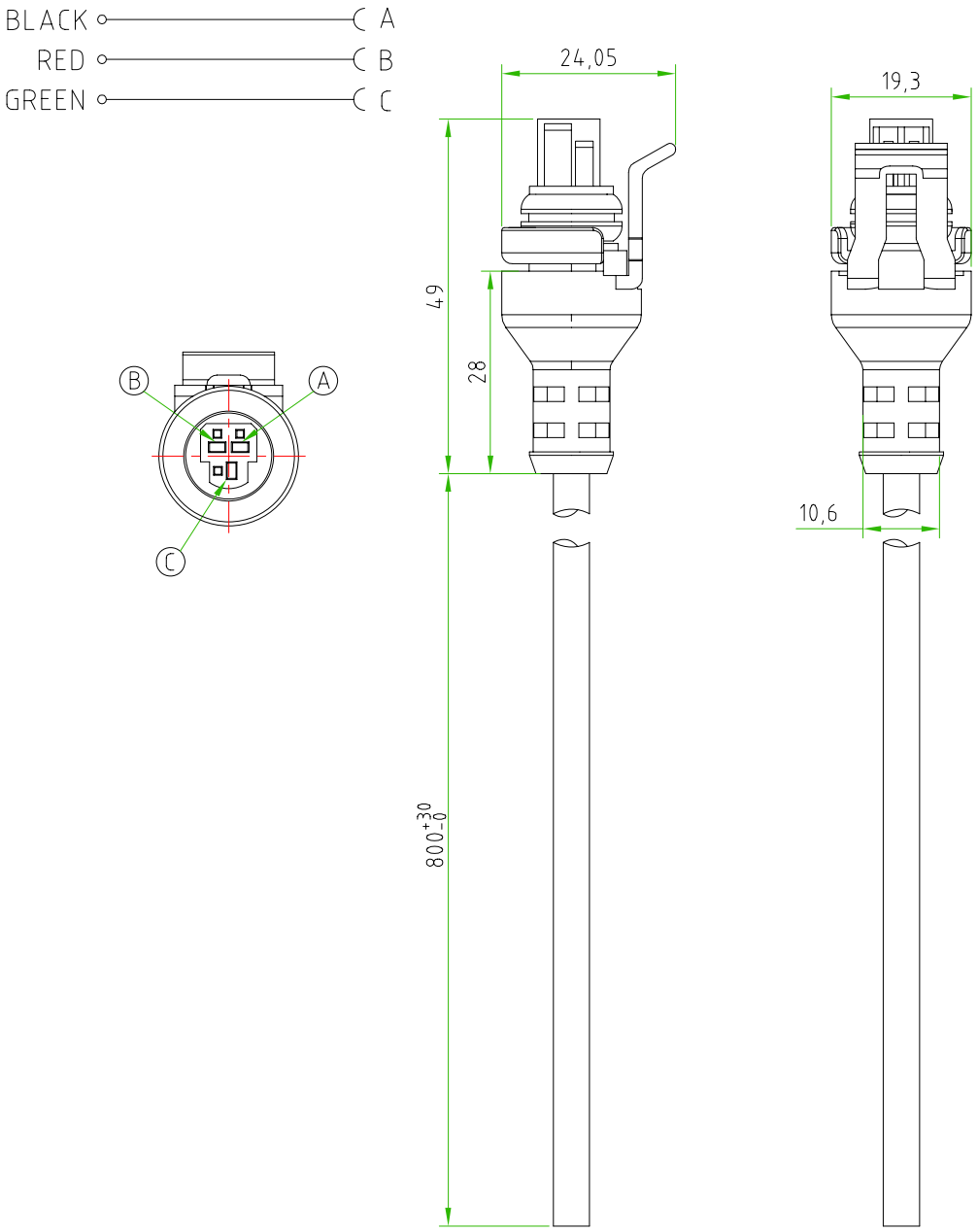

CONNECTOR FEATURES	CONNECTOR TYPE	AUTOMOTIVE
	CONTACT TYPE	FEMALE 3POLES
	CABLE LENGHT	800mm
	PROTECTION CLASS	IP68
	STRIPPING	-
	PEELING AND TINNING	-
	NUMBER OF CONTACTS CONNECTED	N°3
	CONNECTOR WITHOUT H.T.P.LOGO	
CABLE FEATURES	H.T.P.CABLE CODE	63
	NUMBER OF CONDUCTORS	N°3
	CONDUCTOR SECTION	0,75mm^2
	CABLE MATERIAL	PVC IEC332-1 H03VVF
	COATING COLOUR	BLACK
	CONDUCTOR INSULATION MATERIAL	PVC

TOLLERANZE ±0.3	DISEGNATORE LORENZO CIMMINO	DATA 12.12.12	SCALA 1:1		DISEGNO N.
U.d.M / ANGOLO	CONTROLLATO				
DESCRIZIONE: AUTOMOTIVE CONNECTOR FEMALE 180°,3POLES,WITH CABLE PVC/PVC 3X0,75mm^2,IEC332-1 H03VVF,BLACK,L=0.8m		TIPO: AUTOMOTIVE			CODICE CLIENTE:
High Tech Products HTP H.T.P. HIGH TECH PRODUCTS		CODICE: C8660630H			