Rev.	Modify	Date	Signed	Approved

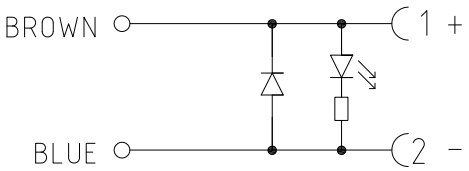

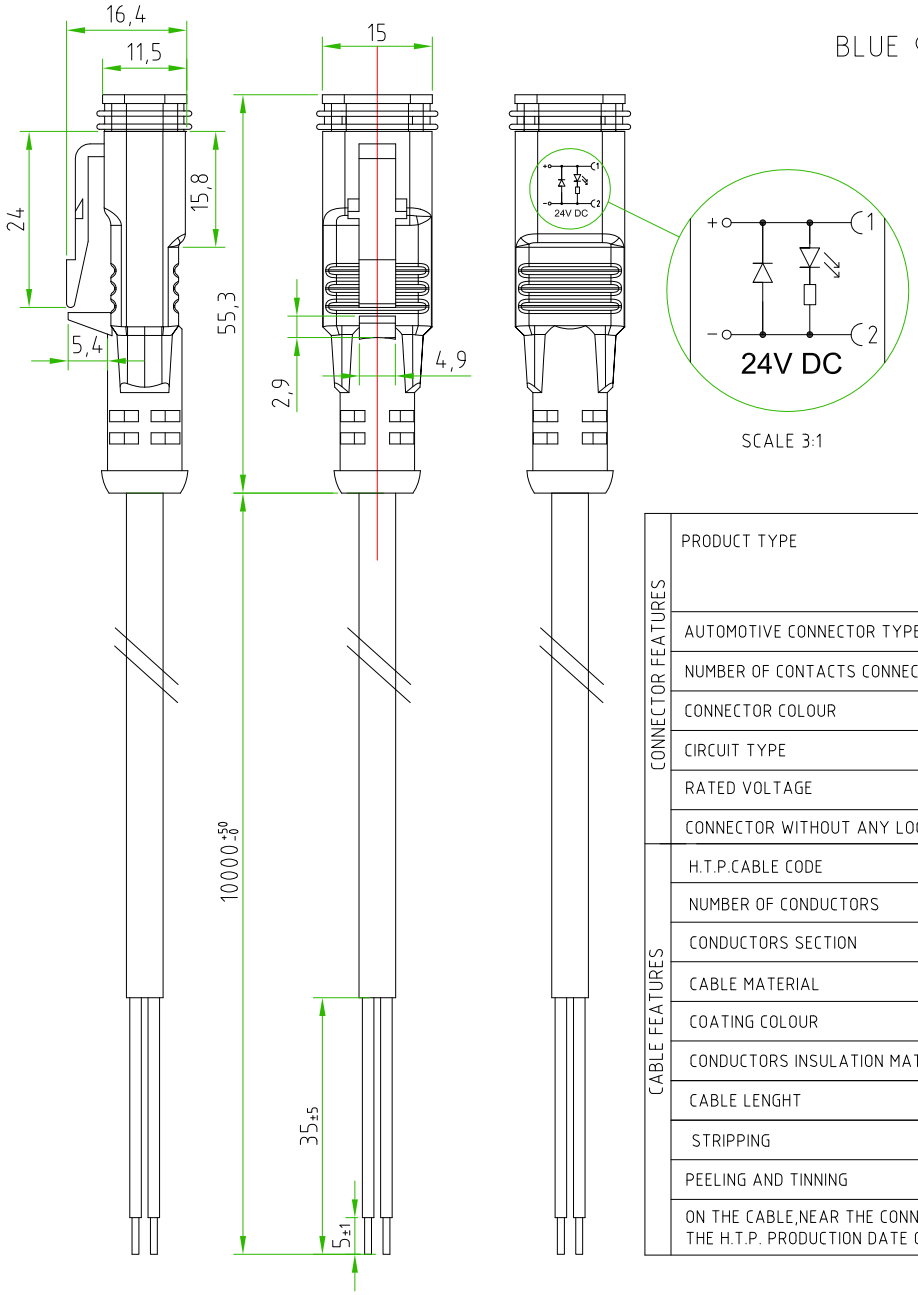

SCALE 3:1

CONNECTOR FEATURES	PRODUCT TYPE	AUTOMOTIVE CONNECTOR (INTERCHANGEABLE WITH DEUTSCH CONNECTOR DT06 SERIES)
	AUTOMOTIVE CONNECTOR TYPE	STRAIGHT 180° FEMALE 2 POLES
	NUMBER OF CONTACTS CONNECTED	N°2
	CONNECTOR COLOUR	TRASPARENT
	CIRCUIT TYPE	RED LED + DIODE (1A)
	RATED VOLTAGE	24V DC
	CONNECTOR WITHOUT ANY LOGO	
CABLE FEATURES	H.T.P.CABLE CODE	CAVO A1
	NUMBER OF CONDUCTORS	N°2
	CONDUCTORS SECTION	0,5mm²
	CABLE MATERIAL	PVC IEC332-1 H03VVF
	COATING COLOUR	BLACK
	CONDUCTORS INSULATION MATERIAL	PVC
	CABLE LENGHT	10000mm
	STRIPPING	35mm STANDARD
	PEELING AND TINNING	5mm STANDARD
	ON THE CABLE,NEAR THE CONNECTOR HEAD,MUST BE SILK PRINTED THE H.T.P. PRODUCTION DATE CODE 5######	

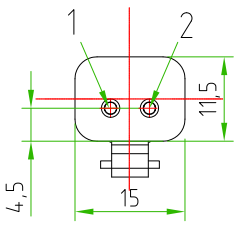

CUSTOMER APPROVAL	
SIGNATURE	DATE
PLEASE SIGN AND RETURN	

Designer	SUGLIANI R.	Date 2021-09-14	Tollerance ±0,3	Units: mm	Series DEUTCH CONNECTOR	Drawing n. 1-1
Approved	CIMMINO L.	Date 2021-09-14	Scale 1:1	Size: A4	Customer code:	

A4

DESCRIPTION

AUTOMOTIVE CONNECTOR,STRAIGHT 180°,FEMALE,2POLES,TRASPARENT, WITH DIODE (1A) + RED LED, 24V DC,WITH CABLE PVC/PVC, 2x0,5mm² IEC332-1 H03VVF, BLACK, L=10m. CONNECTOR WITHOUT H.T.P.LOGO

H.T.P.PART NUMBER

HDCFD2DL1A110

H.T.P. High Tech Products S.R.L. Via Lesina,45 -24030- Brembate di Sopra (Bg) - ITALY Phone:+39.035692509 Fax:+39.035203291 E-mail: info@webhtp.eu Web: http://www.webhtp.eu/

ALL RIGHTS ARE RESERVED.