Rev.	Modify	Date	Signed	Approved

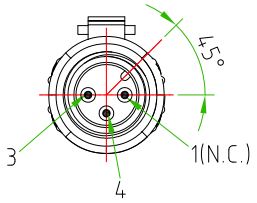



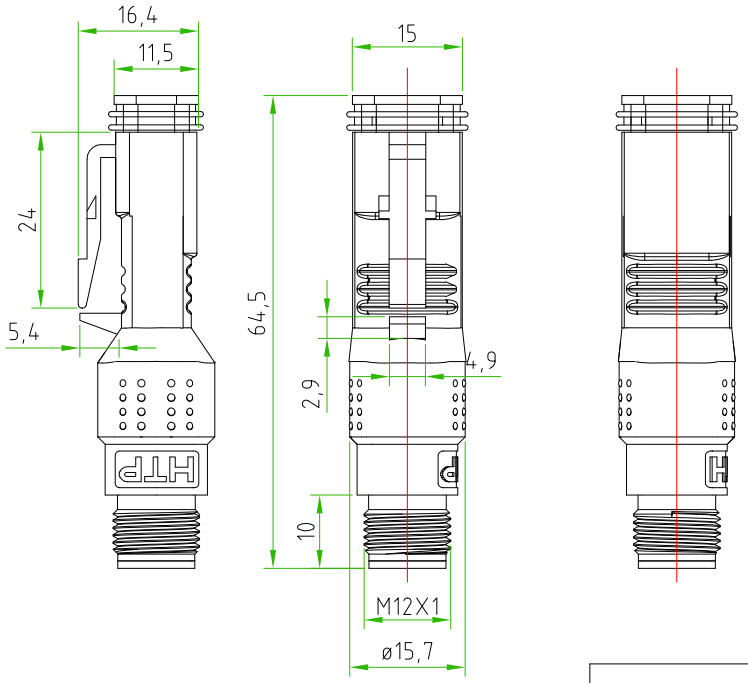

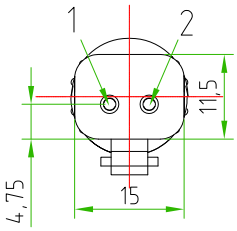

	PRODUCT TYPE	ADAPTER AUTOMOTIVE CONNECTOR (INTERCHANGEABLE WITH DEUTSCH CONNECTOR DT06 SERIES) + M12 CIRCULAR CONNECTOR
ADAPTER CONNECTOR FEATURES	CONNECTOR TYPE	DEUTSCH STRAIGHT 180° FEMALE 2 POLES
	CONNECTOR COLOUR	BLACK
	NUMBER OF CONTACTS	2POLES
	CIRCUIT TYPE	WITHOUT ELECTRONIC
	RATED VOLTAGE	230V AC/DC
	M12 CONNECTOR TYPE	STRAIGHT 180°
	M12 CONTACTS TYPE	MALE 3POLES
	M12 CONTACTS CONNECTED	N°2
	CONNECTOR WITH H.T.P.LOGO	

CUSTOMER APPROVAL	
SIGNATURE	DATE
PLEASE SIGN AND RETURN	

Designer	SUGLIANI R.	Date 2021-04-13	Tollerance ±0.3	Units: mm	Series ADAPTER	Drawing n. 1-1
Approved	CIMMINO L.	Date 2021-04-13	Scale 1:1	Size: A4	Customer code:	

A4

HTP™ High Tech Products S.R.L.

DESCRIPTION

ADAPTER AUTOMOTIVE CONNECTOR,STRAIGHT 180°,FEMALE,2POLES,BLACK, WITHOUT ELECTRONIC, 230V AC/DC,+ M12 CONNECTOR MALE 3POLES. CONNECTOR WITH H.T.P.LOGO

H.T.P.PART NUMBER

HDCFD2000-12MD

H.T.P. High Tech Products S.R.L. Via Lesina,45 -24030- Brembate di Sopra (Bg) - ITALY Phone:+39.035692509 Fax:+39.035203291 E-mail: info@webhtp.eu Web: http://www.webhtp.eu/

ALL RIGHTS ARE RESERVED.