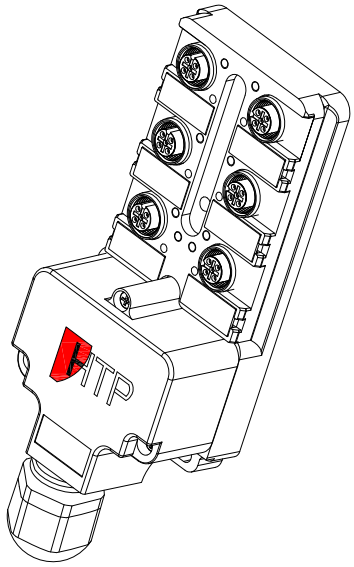

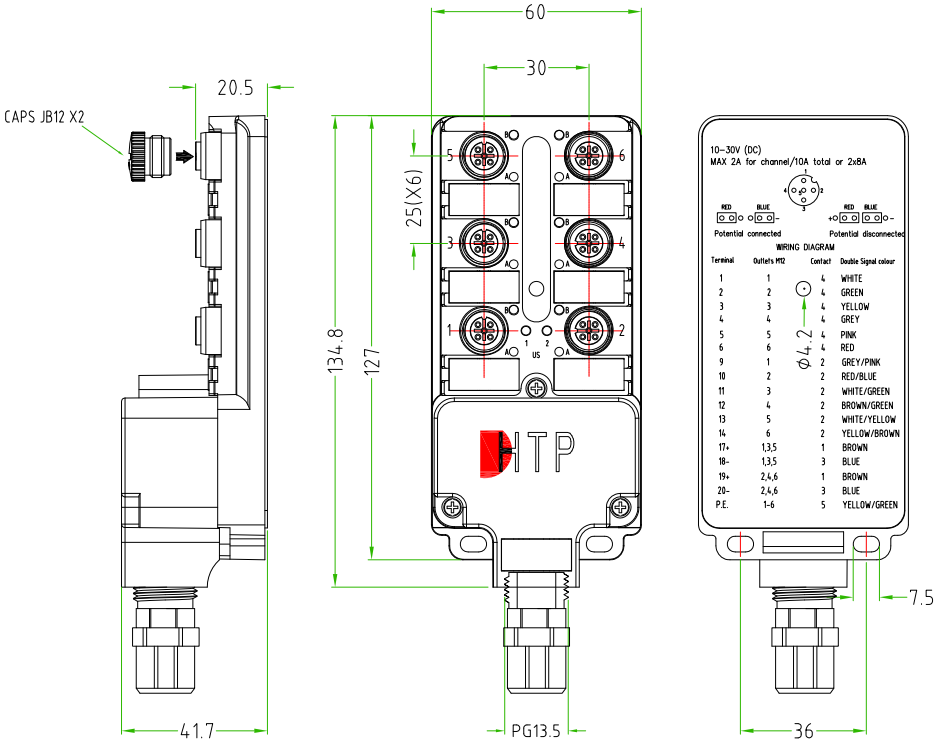

ELECTRICAL SCHEME:

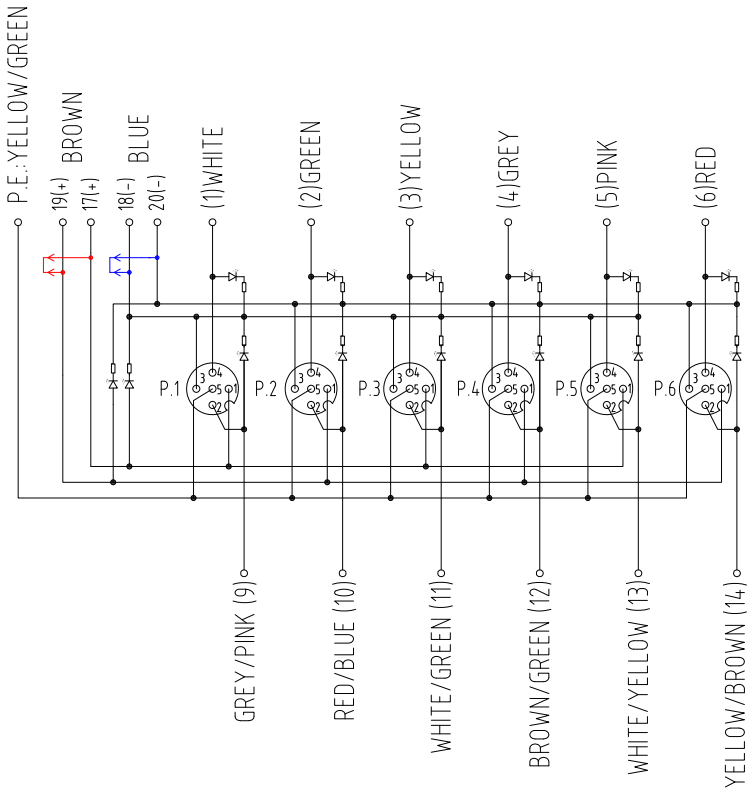

DISTRIBUTION BOX FEATURES	
PRODUCT TYPE	M12 DISTRIBUCTION BOX FIELD ATTACHABLE
DISTRIBUTION BOX TYPE	6POSITION
CONTACT TYPE	FEMALE
NUMBER OF CONTACTS	5POLES
CIRCUIT TYPE	PNP
EXIT CABLE	PG13,5
HOUSING COLOUR	BLACK
DISTRIBUTION BOX DOUBLE SIGNAL	
DISTRIBUTION BOX WITH H.T.P.LOGO	
DISTRIBUTION BOX WITH LED	

TOLLERANZE ±0.3	DISEGNATORE LORENZO CIMMINO	DATA 04.10.13	SCALA 1:2		DISEGNO N.
U.d.M / ANGOLO	CONTROLLATO				
DESCRIZIONE: DISTRIBUTION BOX,BLACK,WITH H.T.P.LOGO,6POSITION,5 POLES,PNP CIRCUIT,DOUBLE SIGNAL,FIELD ATTACHABLE,PRESS CABLE PG13,5,DISTRIBUCTION BOX WITH H.T.P.LOGO		TIPO: DISTRIBUTION BOX			MATERIALE
High Tech Products HTP H.T.P. HIGH TECH PRODUCTS		CODICE: J12T6B5-PG13,5			