

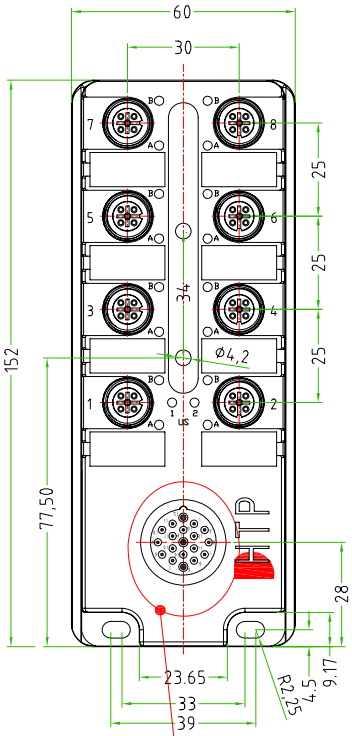

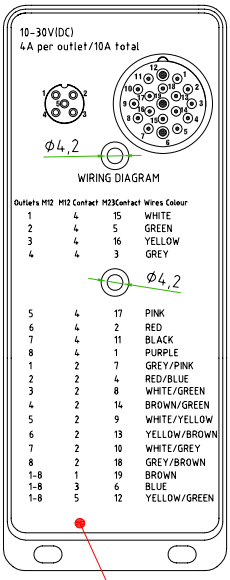

ON THE BACK SIDE OF THE DISTRIBUCTION BOX MUST BE APPLIED THE BLACK LABEL WITH WHITE WRITINGS. THE LABEL MUST BE PLASTIFIED.

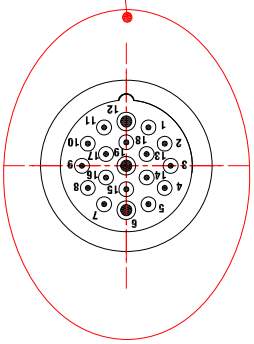

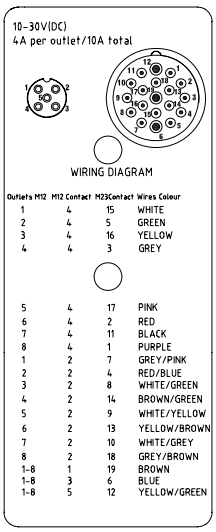

DISTRIBUTION BOX FEATURES		
	PRODUCT TYPE	M12 DISTRIBUCTION BOX WITH EXIT CABLE M23
	DISTRIBUTION BOX TYPE	8POSITION
	CONTACT TYPE(X8)	M12 FEMALE
	NUMBER OF CONTACTS	5POLES
	CIRCUIT TYPE	PNP
	EXIT CABLE	M23 CONNECTOR MALE 19POLES
	HOUSING COLOUR	BLACK
	DISTRIBUTION BOX DOUBLE SIGNAL	
	DISTRIBUTION BOX WITH LED	
	DISTRIBUTION BOX WITH H.T.P.LOGO	

ELECTRICAL SCHEME:

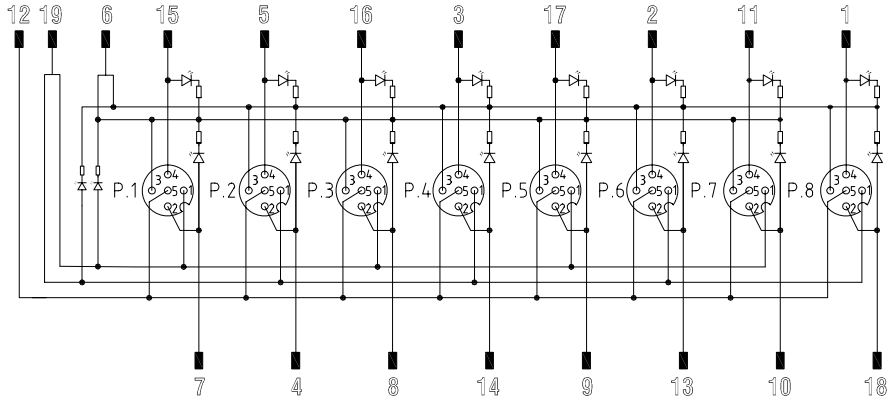

TOLLERANZE 0.1 / U.d.M / ANGOLO	DISEGNATORE LORENZO CIMMINO / CONTROLLATO	DATA 25.09.13	SCALA 1:2		DISEGNO N.
DESCRIZIONE: DISTRIBUTION BOX,BLACK,WITH H.T.P.LOGO,8POSITION,5 POLES,PNP CIRCUIT,DOUBLE SIGNAL,WITH M23 MALE 19POLES. DITRIBUCTION BOX WITH H.T.P.LOGO		TIPO: DISTRIBUTION BOX			MATERIALE
High Tech Products HTP H.T.P. HIGH TECH PRODUCTS		CODICE: J12N8B5-M23			