Rev.	Modify	Date	Signed	Approved

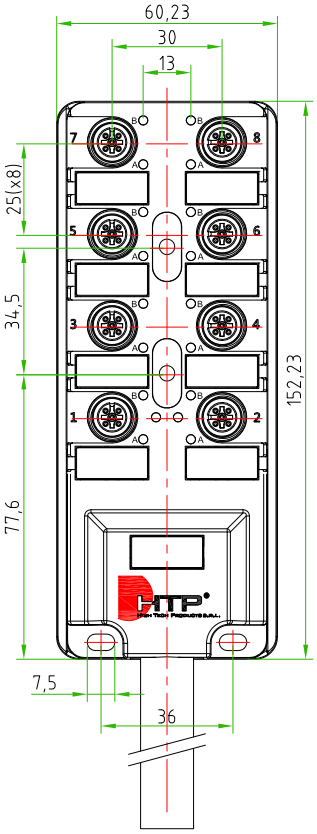

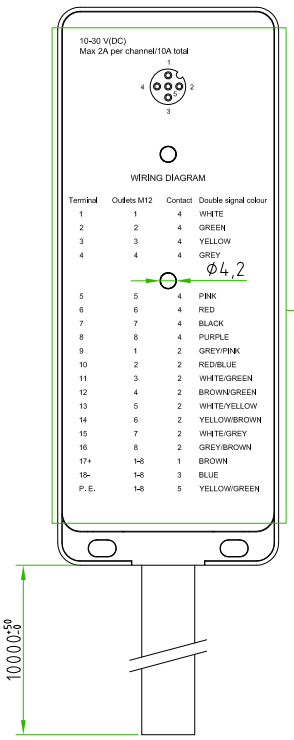

CAPS 12-M-P
(X2)

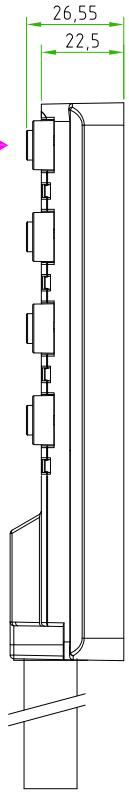

SILK PRINT
SCALE 3:2

10-30 V(DC)
Max 2A per channel/10A total

WIRING DIAGRAM

Terminal	Outlets M12	Contact	Double signal colour
1	1	4	WHITE
2	2	4	GREEN
3	3	4	YELLOW
4	4	4	GREY
5	5	4	PINK
6	6	4	RED
7	7	4	BLACK
8	8	4	PURPLE
9	1	2	GREY/PINK
10	2	2	RED/BLUE
11	3	2	WHITE/GREEN
12	4	2	BROWN/GREEN
13	5	2	WHITE/YELLOW
14	6	2	YELLOW/BROWN
15	7	2	WHITE/GREY
16	8	2	GREY/BROWN
17+	1-8	1	BROWN
18-	1-8	3	BLUE
P. E.	1-8	5	YELLOW/GREEN

CONNECTOR FEATURES	PRODUCT TYPE	M12 DISTRIBUTION BOX,DOUBLE SIGNAL,WITH MOULDED CABLE
	DISTRIBUTION BOX TYPE	N°8 POSITIONS
	M12 CONTACTS TYPE	FEMALE 5POLES
	NUMBER OF CONTACTS CONNECTED (PER EACH M12 CONNECTOR)	N°5
	HOUSING MATERIAL/COLOUR	PA66/BLACK
	TERMINAL BLOCK MATERIAL COLOUR	PA66/BLACK
	PROTECTION CLASS	IP67
	RATED VOLTAGE	10-30V DC
	RATED CURRENT	2A PER SIGNAL /10A IN TOTAL
	CIRCUIT TYPE	PNP
	NUMBER OF SIGNALS PER M12	N°2 (PIN N°4 AND N°2)
	NUMBER OF LEDS /COLOUR	N°16 RED LEDS(SIGNALS) N°2 GREEN LEDS(POWER SUPPLY)
	DISTRIBUTION BOX WITH H.T.P.LOGO	
CABLE FEATURES	H.T.P.CABLE CODE	CAVO P-3+16-K6-IS
	NUMBER OF CONDUCTORS	N°3+N°16
	CONDUCTORS SECTION	0,75mm²(AWG18)+0,34mm²(AWG22)
	CABLE MATERIAL	PUR ULstyle 20549
	COATING COLOUR	BLACK
	CONDUCTORS INSULATION MATERIAL	TPO
	CABLE LENGHT	10000mm
	STRIPPING	-
	PEELING AND TINNING	-
	HIGH FLEX (CLASS 6)	
	ON THE CABLE,NEAR THE CONNECTOR HEAD,MUST BE SILK PRINTED THE H.T.P. PRODUCTION DATE CODE 5######	
	PAY ATTENTION: THE CAPS WILL BE PROVIDED BY NDT (H.T.P. P/N: CAPS 12-M-P)	

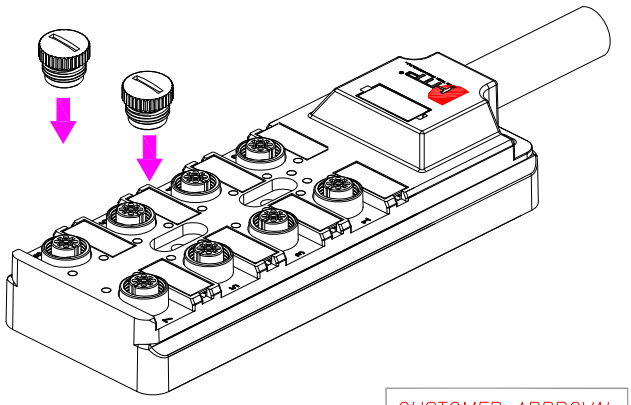

CUSTOMER APPROVAL	
SIGNATURE	DATE
PLEASE SIGN AND RETURN	

Designer	SUGLIANI R.	Date 2021-09-17	Tollerance ±0.3	Units: mm	Series M12	Drawing n. 1-2
Approved	CIMMINO L.	Date 2021-09-17	Scale 1:2	Size: A4	Customer code: DISTRIBUCTION BOX	

A4

HTP™ High Tech Products S.R.L.

DESCRIPTION

M12 DISTRIBUTION BOX, WITH MOULDED CABLE, 8POSITIONS M12 CONNECTORS. WITH N°5 POLES PER EACH M12 CONNECTOR, DOUBLE SIGNAL PER EACH OUTPUT. N°1 RED LED PER EACH SIGNAL + N°2 GREEN LED PER POWER SUPPLY LINES. CABLE PUR/TPO ULStyle 20549 3xAWG18+ 16XAWG22 BLACK L=10m. DISTRIBUTION BOX WITH H.T.P. LOGO

H.T.P.PART NUMBER

J12C8B5P10-IS

H.T.P. High Tech Products S.R.L. Via Lesina,45 -24030- Brembate di Sopra (Bg) - ITALY Phone:+39.035692509 Fax:+39.035203291 E-mail: info@webhtp.eu Web: http://www.webhtp.eu/

ALL RIGHTS ARE RESERVED.

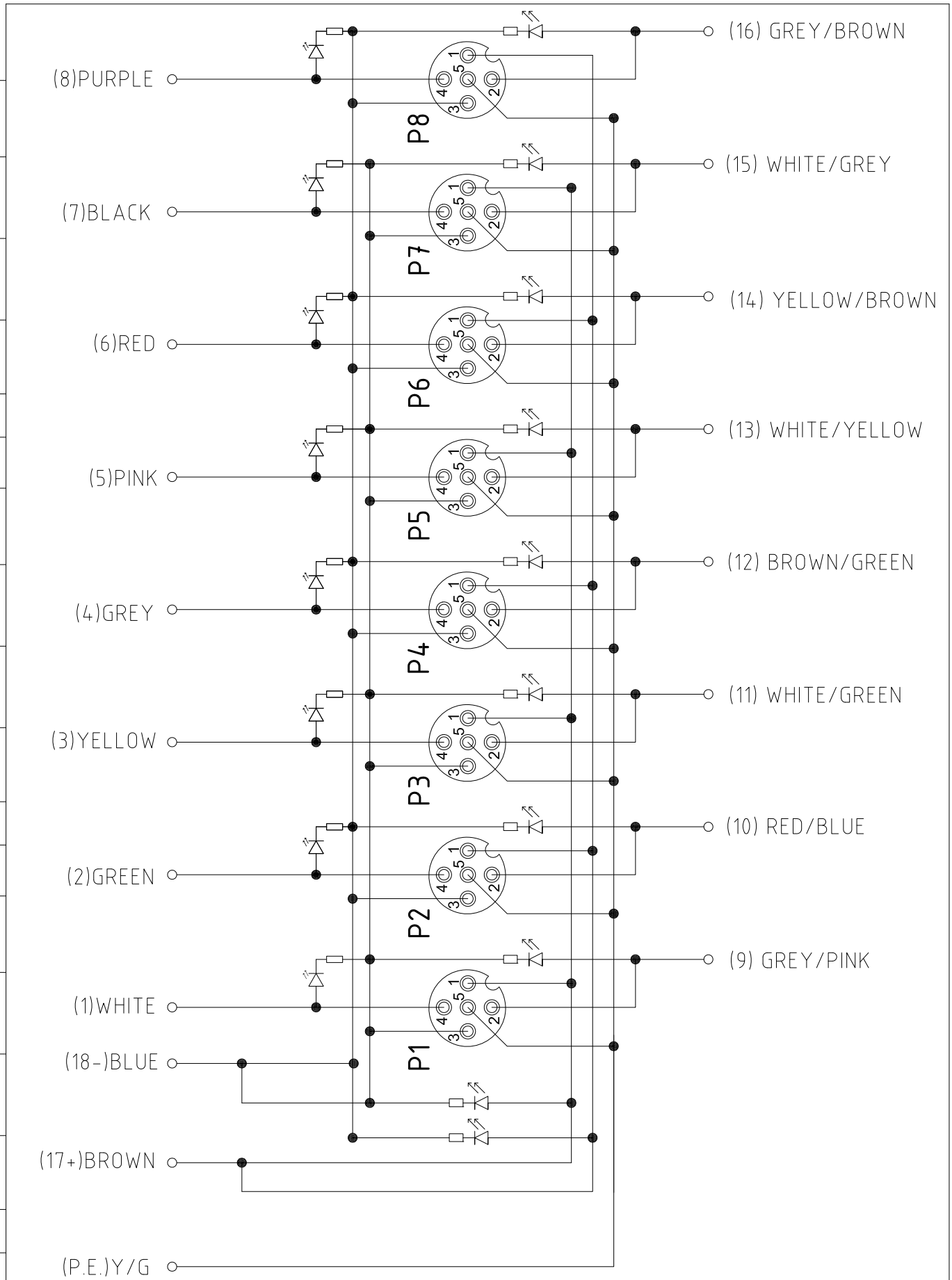

Rev.	Modify	Date	Signed	Approved

Rev.	Modify	Date	Signed	Approved

Rev.	Modify	Date	Signed	Approved

A4

Designer	SUGLIANI R.	Date 2021-09-17	Tollerance ±0.3	Units: mm	Series M12	Drawing n. 2-2
Approved	CIMMINO L.	Date 2021-09-17	Scale 1:2	Size: A4	Customer code: DISTRIBUCTION BOX	

HTP™ High Tech Products S.R.L.

DESCRIPTION

M12 DISTRIBUTION BOX, WITH MOULDED CABLE, 8POSITIONS M12 CONNECTORS. WITH N°5 POLES PER EACH M12 CONNECTOR, DOUBLE SIGNAL PER EACH OUTPUT. N°1 RED LED PER EACH SIGNAL + N°2 GREEN LED PER POWER SUPPLY LINES. CABLE PUR/TPO ULStyle 20549 3xAWG18+ 16XAWG22 BLACK L=10m. DISTRIBUTION BOX WITH H.T.P. LOGO

H.T.P.PART NUMBER

J12C8B5P10-IS

H.T.P. High Tech Products S.R.L. Via Lesina,45 -24030- Brembate di Sopra (Bg) - ITALY Phone:+39.035692509 Fax:+39.035203291 E-mail: info@webhtp.eu Web: http://www.webhtp.eu/

ALL RIGHTS ARE RESERVED.