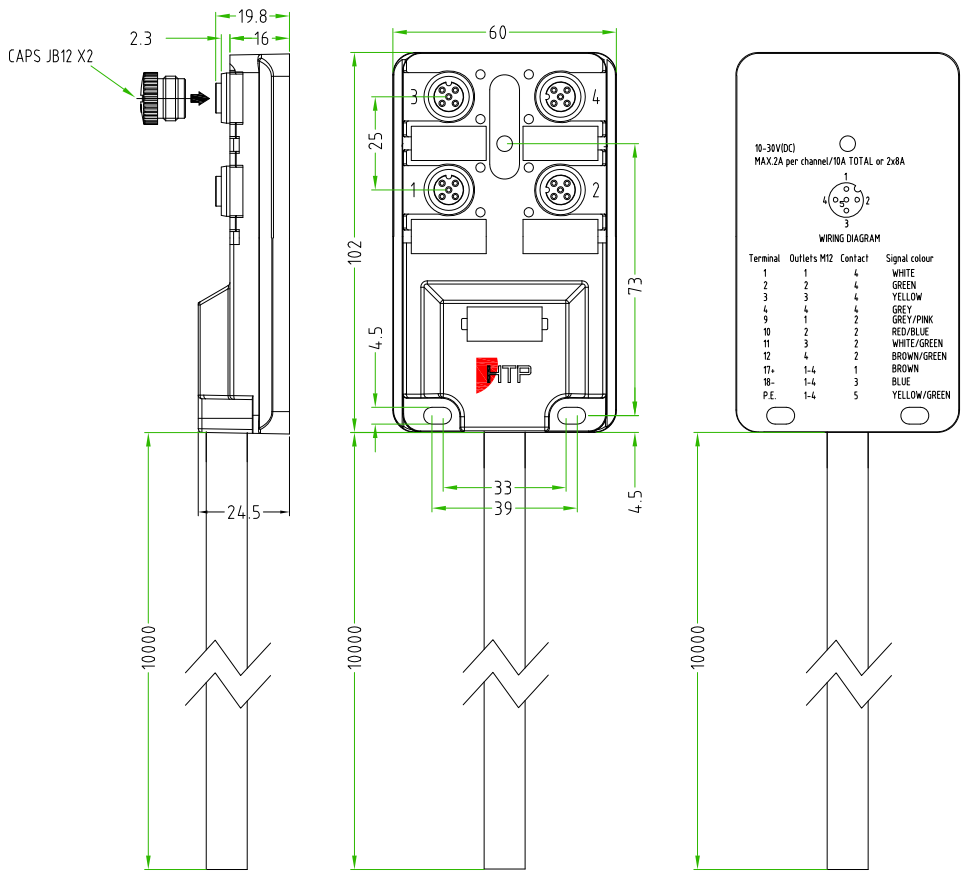


## ELECTRICAL SCHEME:

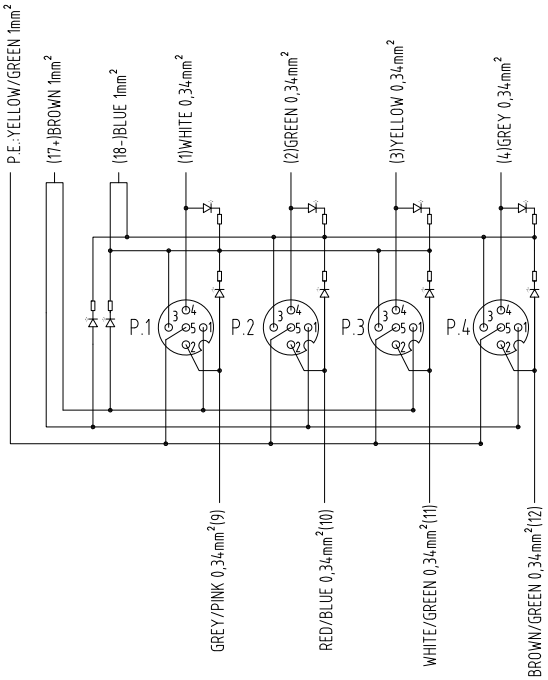


| | | |
|---|---|---|
| DISTRIBUTION BOX FEATURES | DISTRIBUTION BOX TYPE | 4POSITION MOULDED CABLE |
| | DISTRIBUTION BOX COLOUR | BLACK |
| | CONTACT TYPE | FEMALE |
| | NUMBER OF CONTACTS | 5POLES |
| | CABLE LENGHT | 10000mm |
| | CIRCUIT TYPE | PNP |
| | DISTRIBUTION BOX DOUBLE SIGNAL | |
| | DISTRIBUTION BOX WITH H.T.P.LOGO | |
| | DISTRIBUTION BOX WITH LED | |
| CABLE FEATURES | H.T.P. CABLE CODE | P |
| | NUMBER OF CONDUCTORS | n°3X1mm²+n°8X0,34mm ² |
| | CONDUCTOR SECTION | 1mm²/0.34mm² |
| | CABLE MATERIAL | PUR |
| | COATING COLOUR | BLACK |
| | CONDUCTOR ISULATION MATERIAL | PVC |

| | | | | | |
|---|---|---|---|---|---|
| TOLLERANZE ±0.1 | DISEGNATORE LORENZO CIMMINO | DATA 26.09.11 | SCALA 1:2 | | DISEGNO N. |
| U.d.M | ANGOLO | CONTROLLATO | | | |
| DESCRIZIONE DISTRIBUTION BOX,BLACK,WITH H.T.P.LOGO,4POSITION,5 POLES,PNP CIRCUIT, DOUBLE SIGNAL,WITH MOULDED CABLE PUR/PVC,BLACK,3X1mm²+8X0,34mm²,L=10m | | | TIPO DISTRIBUTION BOX | | MATERIALE |
| High Tech Products HTP H.T.P. HIGH TECH PRODUCTS | | | CODICE J12C4B5P10 | | |