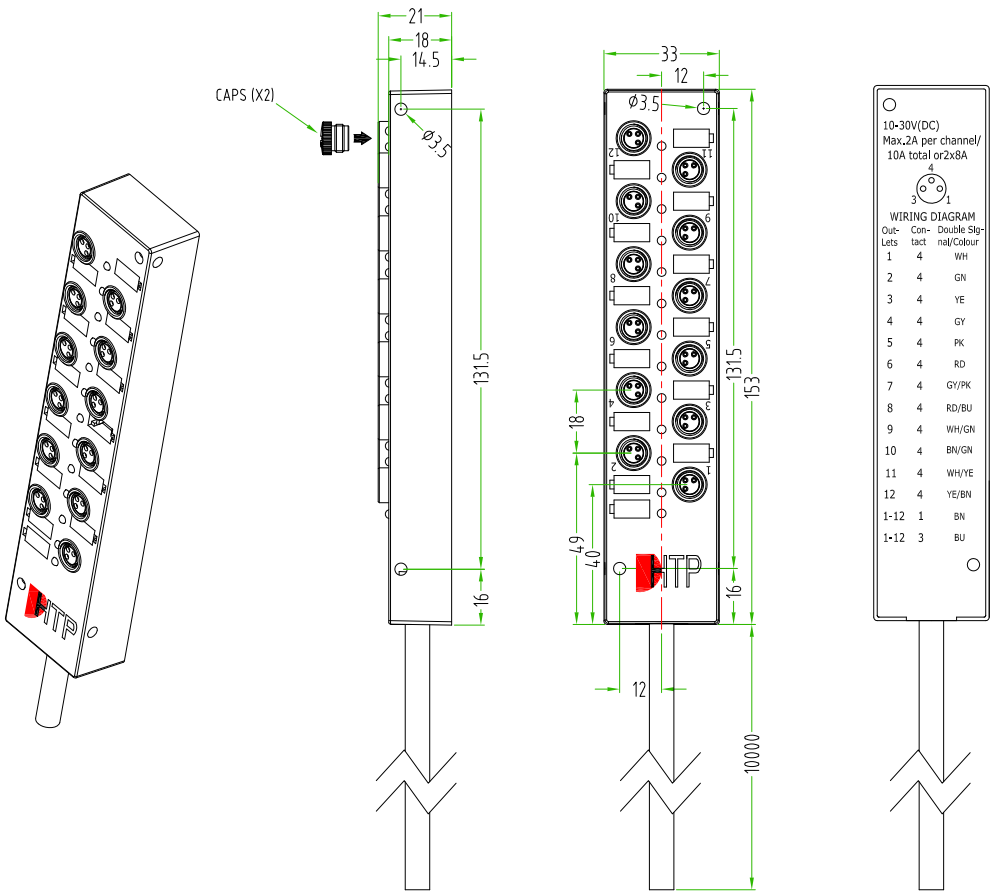

ELECTRICAL SCHEME:

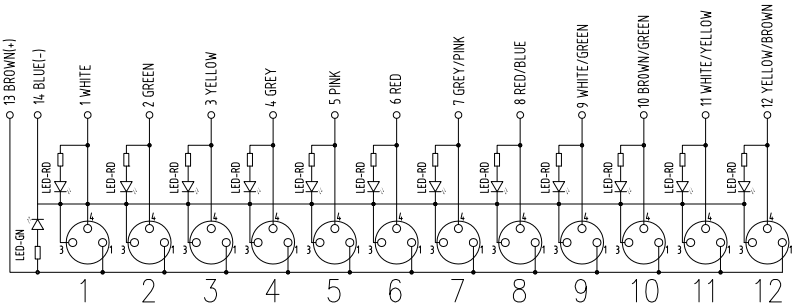

DISTRIBUTION BOX FEATURES	DISTRIBUTION BOX TYPE	M8 12POSITION MOULDED CABLE
	DISTRIBUTION BOX COLOUR	BLACK
	CONTACT TYPE	FEMALE
	NUMBER OF CONTACTS	3POLES
	CABLE LENGHT	10000mm
	CIRCUIT TYPE	PNP
	DISTRIBUTION BOX SINGLE SIGNAL	
	DISTRIBUTION BOX WITH H.T.P.LOGO	
	DISTRIBUTION BOX WITH LED	
CABLE FEATURES	H.T.P. CABLE CODE	CAVO P-2+12
	NUMBER OF CONDUCTORS	n°2X0.5mm²+n°12X0,25mm²
	CONDUCTOR SECTION	0.5mm²/0.25mm²
	CABLE MATERIAL	PUR
	COATING COLOUR	BLACK
	CONDUCTOR ISULATION MATERIAL	PVC

TOLLERANZE ±0.1	DISEGNATORE LORENZO CIMMINO	DATA 26.02.10	SCALA 1:2		DISEGNO N.
U.d.M / ANGOLO	CONTROLLATO				
DESCRIZIONE: M8 DISTRIBUTION BOX,BLACK,WITH H.T.P.LOGO,12POSITION,3 POLES,PNP CIRCUIT, SINGLE SIGNAL, WITH MOULDED CABLE PUR/PVC,BLACK,2X0,5mm²+12X0,25mm²,L=10m		TIPO: DISTRIBUTION BOX			MATERIALE
H.T.P. HIGH TECH PRODUCTS		CODICE: J08C12B3P10			