

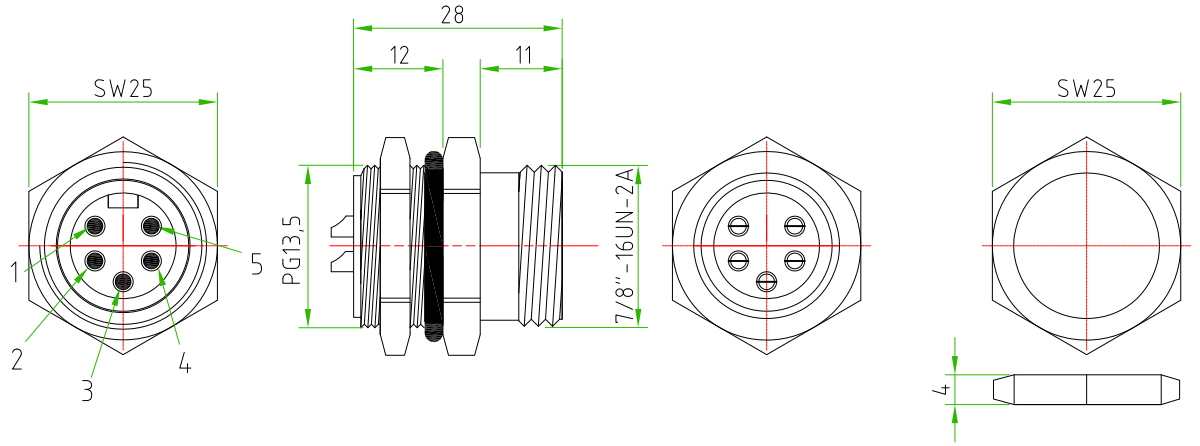

CONNECTOR FEATURES	
CONNECTOR TYPE	7/8 " TO PANEL
MOUNTING TYPE	FRONT
CONTACT TYPE	MALE
NUMBER OF CONTACTS	n°5POLES
HOUSING MATERIAL	Brass+Nickel plated
FIXING THREAD	7/8"-16UN-2A
INTERNAL CORE MATERIAL	PA66 BASFC3U ⚠
SWITCH FIXED NUT	SW27
RATED VOLTAGE	300V AC/DC
RATED CURRENT	8A
CONNECTOR WITHOUT ANY LOGO	

TOLLERANZE ±0.2	DISEGNATORE LORENZO CIMMINO	DATA 23.01.15	SCALA 2:1		DISEGNO N.	
U.d.M / ANGOLO	CONTROLLATO					
DESCRIZIONE: CIRCULAR CONNECTOR 7/8" MALE PANEL 5 POLES FRONTAL MOUNTING WITH SOLDERED CONTACTS. CONNECTOR WITHOUT ANY LOGO		TIPO: M12			MATERIALE	
High Tech Products HTP H.T.P. HIGH TECH PRODUCTS		CODICE: 78MP5000-PG13,5-V0				