

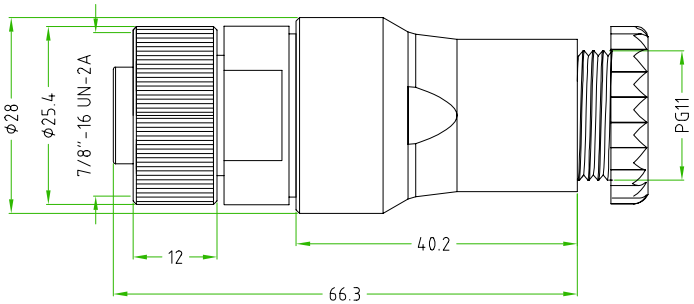

CONNECTOR FEATURES	
PRODUCT TYPE	7/8" TO CABLE
CONTACT TYPE	FEMALE
N°OF CONTACT	4 POLES
RATED CURRENT	10A
RATED VOLTAGE	600V
HOUSING TYPE	180°
HOUSING COLOUR	BLACK
EXIT CABLE	PG9/PG11
PROTECTION CLASS	IP67
COUPLING NUT MATERIAL	Brass+nickel plated (CuZnNi)
HOUSING MATERIAL	PA66+15% FIBRE GLASS
O''RING MATERIAL	NBR

TOLLERANZE ±0.2		DISEGNATORE LORENZO CIMMINO	DATA 02.05.12	SCALA 1:1		DISEGNO N.
U.d.M	ANGOLO	CONTROLLATO				
DESCRIZIONE 7/8" FEMALE,TO CABLE,4POLES,EXIT CABLE PG11			TIPO 7/8"			MATERIALE
H.T.P. HIGH TECH PRODUCTS			CODICE 78FC4000			