Rev.	Modify	Date	Signed	Approved

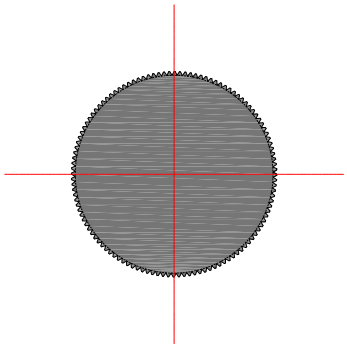

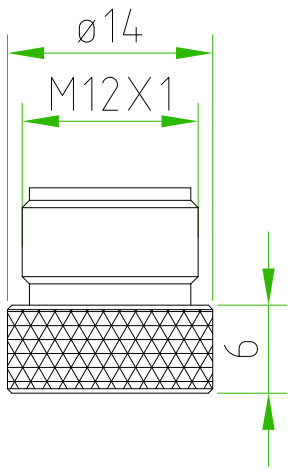

CONNECTOR FEATURES		
	PRODUCT TYPE	M12 METAL CAP
	TYPE	MALE
	SHAPE	CIRCULAR
	MATERIAL	BRASS+NICKEL PLATED
	O-RING MATERIAL	-
	PROTECTION CLASS	IP67
	PACKAGING:	PLASTIC BAG 50PCS

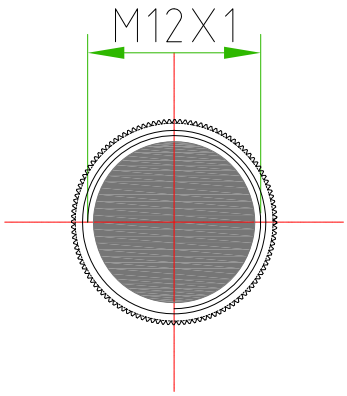

CUSTOMER APPROVAL	
SIGNATURE	DATE
PLEASE SIGN AND RETURN	

Designer	SUGLIANI R.	Date 2017-11-06	Tollerance ±0.3	Units: mm	Series M12	Drawing n. 1-1
Approved	CIMMINO L.	Date 2017-11-06	Scale 2:1	Size: A4	Customer code:	

A4

DESCRIPTION
M12 METAL CIRCULAR CAP,MALE,
M12 CAP SUITABLE FOR M12 FEMALE CONNECTOR.

H.T.P.PART NUMBER

CAPS-12-M-M

H.T.P. High Tech Products S.R.L. Via Lesina,45 -24030- Brembate di Sopra (Bg) - ITALY Phone:+39.035692509 Fax:+39.035203291 E-mail: info@webhtp.eu Web: http://www.webhtp.eu/

ALL RIGHTS ARE RESERVED.