ELECTRICAL SCHEME

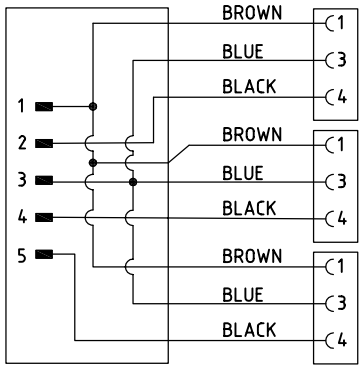

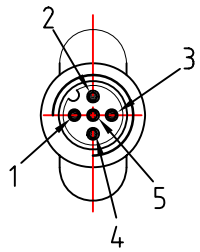

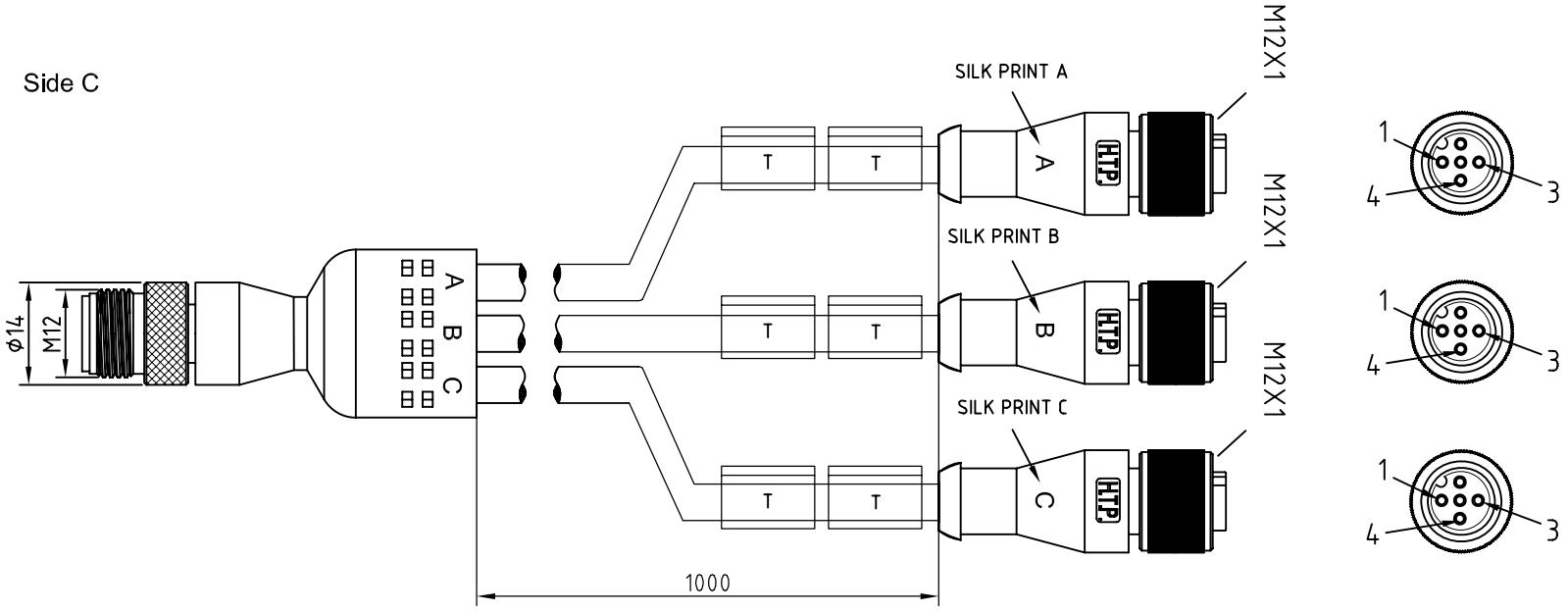

T=THE HOLDER FOR CABLE MARKING

CONNECTOR FEATURES	Y M12 TYPE CONTACT	MALE 5POLES
	N° 3 M12 CONNECTORS	FEMALE 3POLES
	N°3 CABLE LENGHT	1000mm
	PROTECTION CLASS	IP69K
CABLE FEATURES	H.T.P.CABLE CODE	B
	NUMBER OF CONDUCTORS	n°3
	CONDUCTOR SECTION	0.34mm²
	CABLE MATERIAL	PVC CEI2022 IIOR
	COATING COLOUR	BLACK
	CONDUCTOR INSULATION MATERIAL	PVC

TOLLERANZE	DISEGNATORE LORENZO CIMMINO	DATA 23.07.09	SCALA 1:1		DISEGNO N.
U.d.M / ANGOLO	CONTROLLATO				
DESCRIZIONE: YCONNECTOR M12 MALE 5POLES 3WAY WITH N°3 M12 FEMALE 3POLES,CABLE PVC/PVC BLACK,3X0,34mm²,CEI2022IIOR,L=1m CONNECTORS WITH H.T.P.LOGO		TIPO: Y 3WAY			MATERIALE
HTP H.T.P. HIGH TECH PRODUCTS		CODICE: A5B1Z-C3-C3-C3			