Rev.	Modify	Date	Signed	Approved

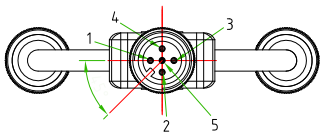

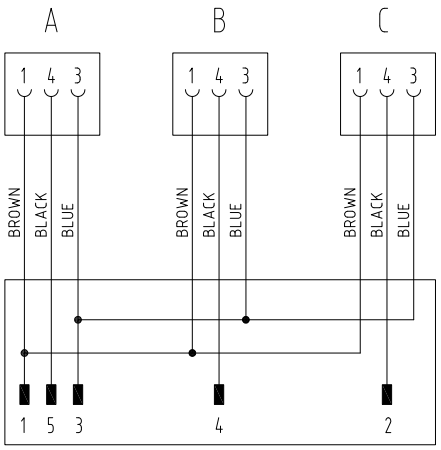

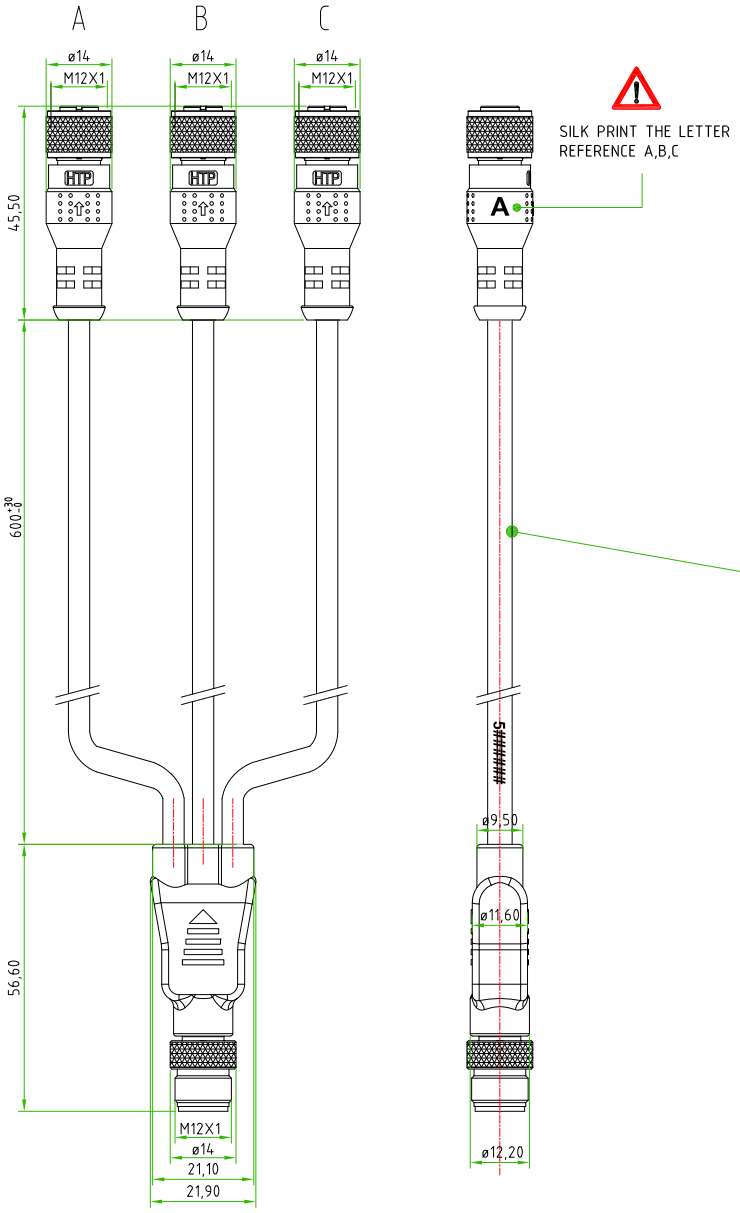

SIDE A/B/C

CONNECTORS FEATURES	PRODUCT TYPE	M12 CIRCULAR CONNECTOR WITH MOULDED CABLE
	CONNECTOR TYPE	STRAIGHT 180°
	CONTACTS TYPE	FEMALE 3POLES
	NUMBER OF CONTACTS CONNECTED	N°3
	PROTECTION CLASS	IP69K
	CONNECTORS WITHOUT H.T.P.LOGO	
	ON EACH CONNECTOR'S HEAD MUST BE SILK PRINTED THE LETTERS: A-B-C.	
CABLE FEATURES	H.T.P.CABLE CODE	CAVO A-3
	NUMBER OF CONDUCTORS	N°3
	CONDUCTORS SECTION	0,25mm²
	CABLE MATERIAL	PVC CEI2022
	COATING COLOUR	BLACK
	CONDUCTORS INSULATION MATERIAL	PVC
	TEMPERATURE RANGE	FROM -15°C TO +70°C
	CABLE LENGTHS	A:600mm B:600mm C:600mm
	ON THE CABLE,NEAR THE CONNECTOR HEAD,MUST BE SILK PRINTED THE H.T.P. PRODUCTION DATE CODE 5######	
	ON THE CABLE MUST NOT BE APPLIED THE HOLDERS FOR CABLE MARKING.	

M12 Y 3WAY

CONNECTOR FEATURES	PRODUCT TYPE	Y M12 CIRCULAR CONNECTOR WITH N°3 EXITS
	CONNECTOR TYPE	STRAIGHT 180°
	CONTACTS TYPE	MALE 5POLES
	NUMBER OF EXITS	3WAY
	RATED VOLTAGE	60V AC/DC
	RATED CURRENT	4A
	CONNECTOR WITHOUT ANY LOGO	

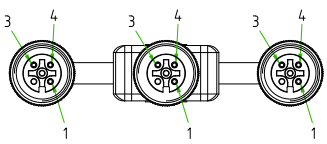

CUSTOMER APPROVAL	
SIGNATURE	DATE
PLEASE SIGN AND RETURN	

Designer	SUGLIANI R.	Date	2016-05-12	Tollerance	±0.3	Units:	mm	Series	M12 Y 3WAY	Drawing n. 1-1
Approved	CIMMINO L.	Date	2016-05-12	Scale	TO FIT	Size:	A4	Customer code:		

A4

HTP™ High Tech Products S.R.L.

DESCRIPTION

Y CONNECTOR M12 WITH N°3 WAY; N°3 M12 CONNECTORS,FEMALES,STRAIGHT 180°,3POLES, WITH CABLES PVC/PVC CEI2022,3X0,34mm²,BLACK, L(A)=600mm; L(B)=600mm; L(C)=600mm, CONNECTORS WITH H.T.P.LOGO.

H.T.P.PART NUMBER

A5A0F-C3-C3-C3

H.T.P. High Tech Products S.R.L. Via Lesina,45 -24030- Brembate di Sopra (Bg) - ITALY Phone:+39.035692509 Fax:+39.035203291 E-mail: info@webhtp.eu Web: http://www.webhtp.eu/

ALL RIGHTS ARE RESERVED.