ELECTRICAL SCHEME

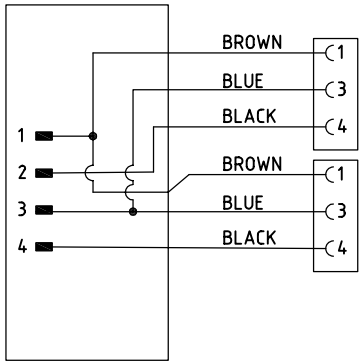

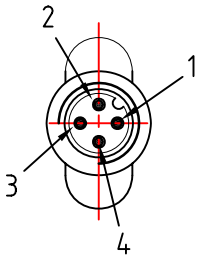

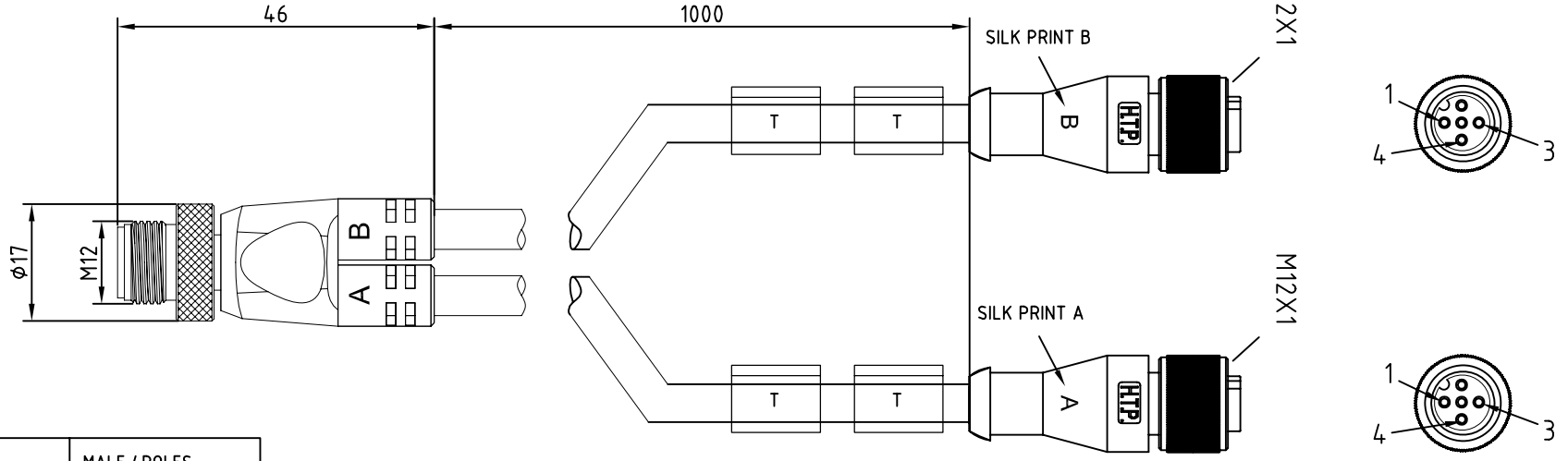

T=THE HOLDER FOR CABLE MARKING

CONNECTOR FEATURES	Y M12 TYPE CONTACT	MALE 4POLES
	N° 2 M12 CONNECTORS	FEMALE 3POLES
	N°3 CABLE LENGHT	1000mm
	PROTECTION CLASS	IP69K
	CONNECTORS WITHOUT H.T.P.LOGO	
CABLE FEATURES	H.T.P.CABLE CODE	B
	NUMBER OF CONDUCTORS	n°3
	CONDUCTOR SECTION	0.34mm²
	CABLE MATERIAL	PVC CEI2022
	COATING COLOUR	BLACK
	CONDUCTOR INSULATION MATERIAL	PVC

TOLLERANZE	DISEGNATORE LORENZO CIMMINO	DATA 02.10.09	SCALA 1:1		DISEGNO N.
U.d.M / ANGOLO	CONTROLLATO				
DESCRIZIONE: YCONNECTOR M12 MALE 4POLES 2WAY WITH N°2 M12 FEMALE 3POLES,CABLE PVC/PVC BLACK,3X0,34mm²,CEI2022,L=1m CONNECTORS WITH H.T.P.LOGO		TIPO: Y 2WAY			MATERIALE
H.T.P. HIGH TECH PRODUCTS		CODICE: A4B1ZC3C3			