FEMALE

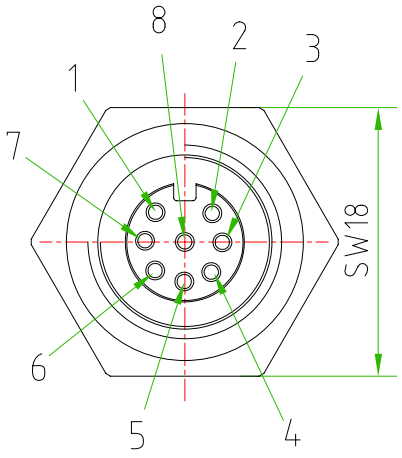

MALE

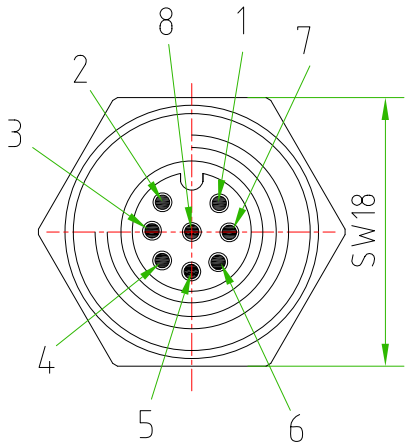

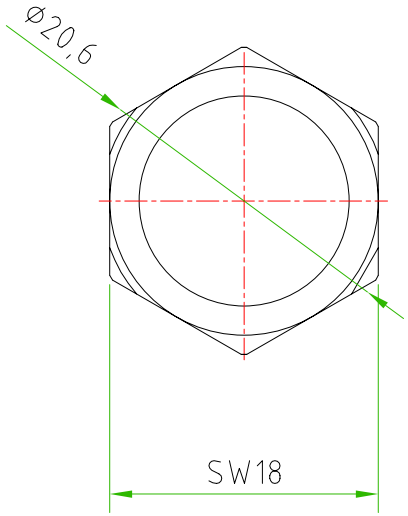

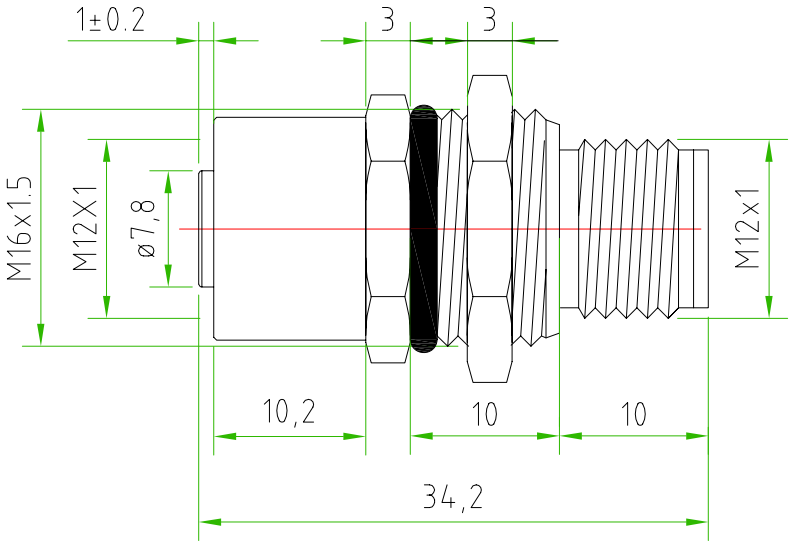

ELECTRICAL SCHEME:

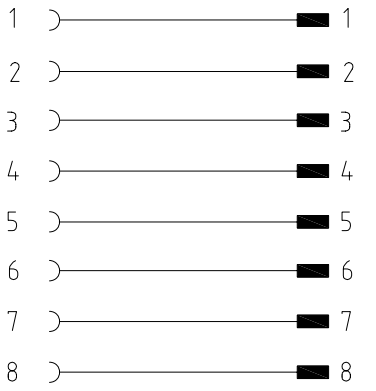

CONNECTOR FEATURES	
PRODUCT TYPE	ADAPTER M12-M12
CONNECTOR TYPE	PANEL
CONTACT TYPE	FEMALE-MALE
NUMBER OF CONTACTS CONNECTED	n°8
O''RING MATERIAL	NBR
HOUSING MATERIAL	METAL (CuZn/Ni)
THREAD	M16X1.5
SWITCH FIXED NUT	SW18

TOLLERANZE ±0.2		DISEGNATORE LORENZO CIMMINO	DATA 09.03.11	SCALA 2:1		DISEGNO N.
U.d.M	ANGOLO	CONTROLLATO				
DESCRIZIONE M12 FEMALE PANEL-M12 MALE PANEL 8 POLES THREAD M16X1,5			TIPO M12			MATERIALE
High Tech Products HTP H.T.P. HIGH TECH PRODUCTS			CODICE 12MP8-12FP8-M16			