Rev.	Modify	Date	Signed	Approved

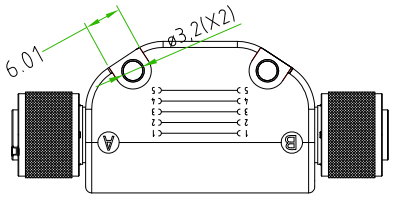



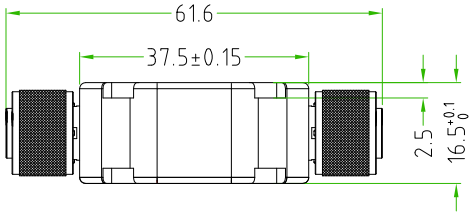

PAY ATTENTION TO THE POLARIZATION KEY POSITIONING

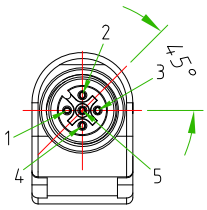

side B

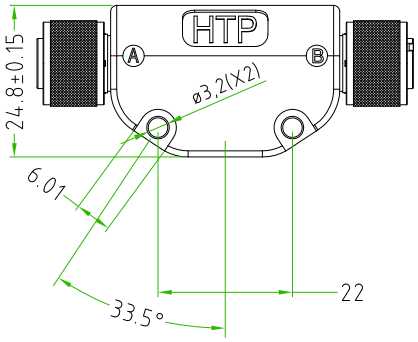

PAY ATTENTION TO THE POLARIZATION KEY POSITIONING

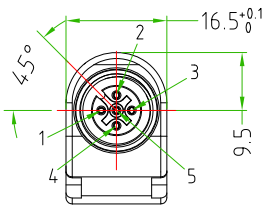

side A

CONNECTOR FEATURES		
	PRODUCT TYPE	M12-M12 ADAPTER
	CONTACTS TYPE	SIDE A: FEMALE 5POLES SIDE B: FEMALE 5POLES
	NUMBER OF CONTACTS CONNECTED	N°5
	RATED VOLTAGE	60V AC/DC
	RATED CURRENT	4A
	PRODUCT WITH H.T.P.LOGO	
	ON THE M12 TT MUST BE SILK PRINTED THE ELECTRICAL SCHEME	

CUSTOMER APPROVAL	
SIGNATURE	DATE
PLEASE SIGN AND RETURN	

Designer	CIMMINO L.	Date 2015-10-28	Tollerance ±0.3	Units: mm	Series M12-M12 ADAPTER	Drawing n. 1-1
Approved	MAZZOLA M.	Date 2015-10-28	Scale 1:1	Size: A4	Customer code:	

A4

DESCRIPTION

M12 ADAPTER,BLACK COLOUR,SIDE A:FEMALE 5POLES;SIDE B:FEMALE 5POLES
CONNECTOR WITH H.T.P.LOGO

H.T.P.PART NUMBER

12FD-12FD

H.T.P. High Tech Products S.R.L. Via Lesina,45 -24030- Brembate di Sopra (Bg) - ITALY Phone:+39.035692509 Fax:+39.035203291 E-mail: info@webhtp.eu Web: http://www.webhtp.eu/

ALL RIGHTS ARE RESERVED.