FRONTAL VIEW

PAY ATTENTION to the CUT of the thread and the positioning of the internal core

NBR O-RING
HARNESS: 80SHORE A

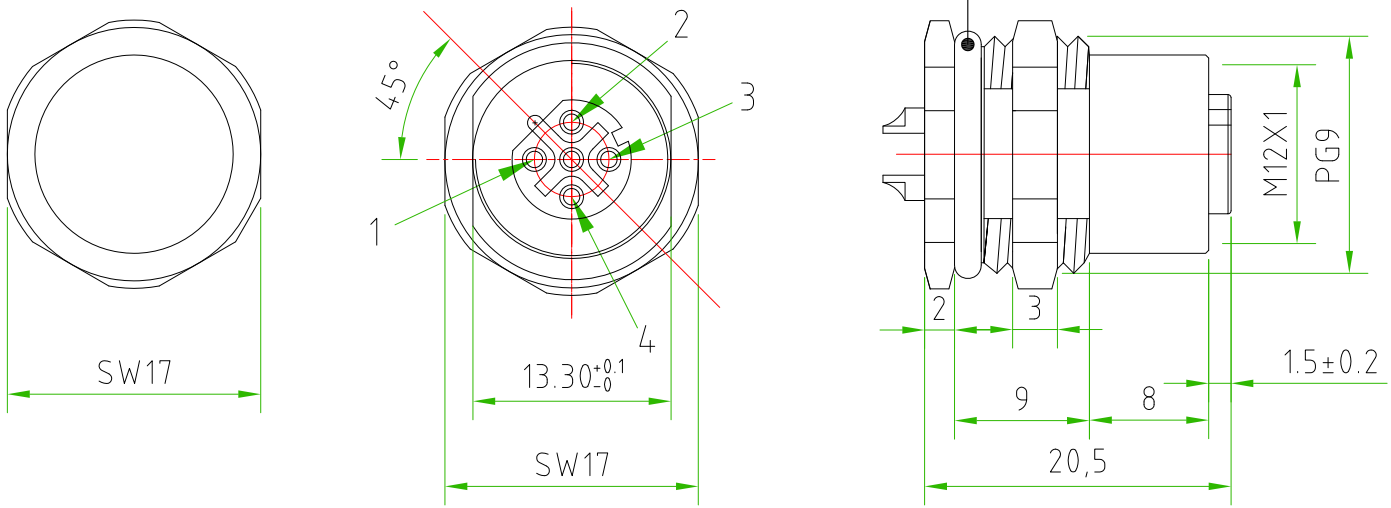

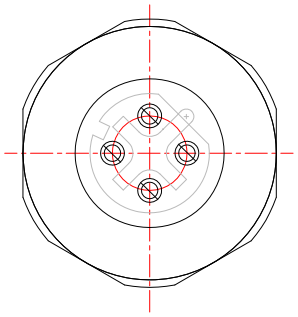

PANEL SIZE

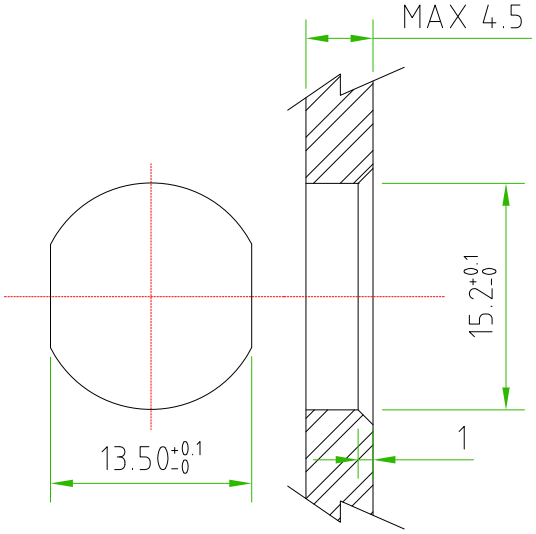

CONNECTOR FEATURES	
CONNECTOR TYPE	M12 TO PANEL D-CODED
MOUNTING TYPE	FRONTAL
CONTACT TYPE	FEMALE
NUMBER OF CONTACTS CONNECTED	n°4
HOUSING MATERIAL	Brass+nickel plated (CuZnNi)
O-RING MATERIAL	NBR
FIXING THREAD	PG9 WITH CUT
SWITCH FIXED NUT	SW17
CONTACT TYPE	SOLDERED CONTACTS
SIZE CUT	13.3mm -0/+0.1
RATED VOLTAGE	250V AC/DC
RATED CURRENT	4A
CONNECTOR WITHOUT H.T.P.LOGO	

TOLLERANZE ±0.2	DISEGNATORE LORENZO CIMMINO	DATA 17.03.14	SCALA 2:1		DISEGNO N.
U.d.M / ANGOLO	CONTROLLATO				
DESCRIZIONE: M12 D-CODED FEMALE TO PANEL,4 POLES,BACK MOUNTING, PG9 THERAD WITH CUT,WITH CONTACTS FOR SOLDERED WIRES.CONNECTOR WITHOUT H.T.P.LOGO		TIPO: M12			MATERIALE
H.T.P. HIGH TECH PRODUCTS		CODICE: D-12FR4000-PG9-CUT			