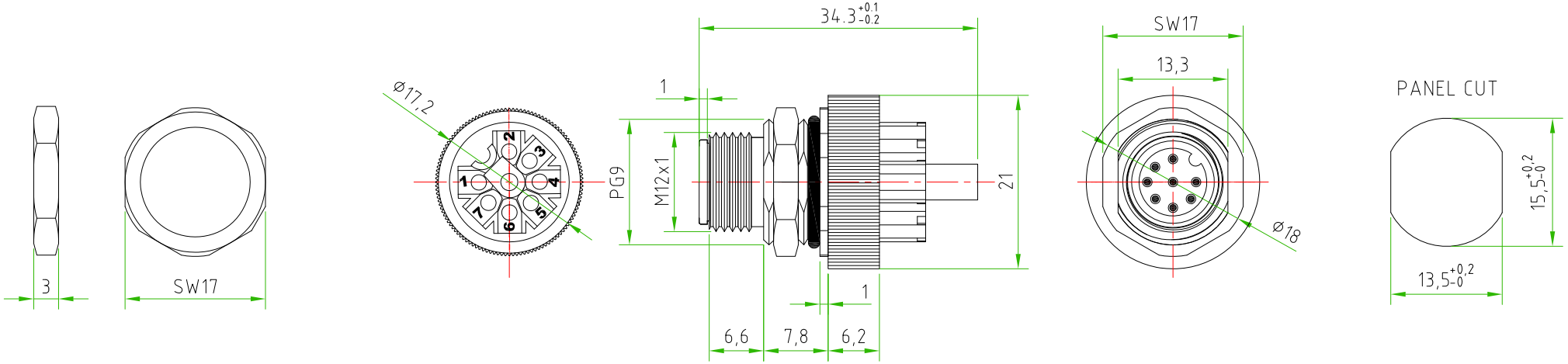

CONNECTOR FEATURES	
CONNECTOR TYPE	M12 TO PANEL A-CODED
MOUNTING TYPE	BACK
CONTACT TYPE	MALE
NUMBER OF CONTACTS CONNECTED	n°8
HOUSING MATERIAL	Brass+nickel plated (CuZnNi)
FIXING THREAD	PG9
SWITCH FIXED NUT	SW17
CONTACT TYPE	FIELD ATTACHABLE
RATED VOLTAGE	30V AC/DC
RATED CURRENT	2A
CONNECTOR WITHOUT H.T.P.LOGO	

TOLLERANZE ±0.2		DISEGNATORE LORENZO CIMMINO	DATA 15-01-2013	SCALA 1:1		PESO
U.d.M	ANGOLO	CONTROLLATO				
DESCRIZIONE M12 TO PANEL,MALE, 8POLES,BACK MOUNITING,PG9 WITH CUT,FIELD ATTACHABLE CONTACTS			TIPO M12			MATERIALE
High Tech Products HTP H.T.P. HIGH TECH PRODUCTS			CODICE 12MX8000-PG9-CUT			