


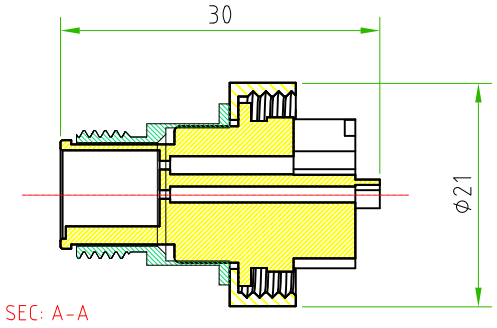


| CONNECTOR FEATURES | |
|---|---|
| CONNECTOR TYPE | M12 TO PANEL |
| MOUNTING TYPE | BACK |
| CONTACT TYPE | MALE |
| NUMBER OF CONTACTS CONNECTED | n°4 |
| HOUSING MATERIAL | METAL (CuZn/Ni) |
| THREAD | PG9 |
| SWITCH FIXED NUT | SW17 |
| CONTACT TYPE | SCREW |

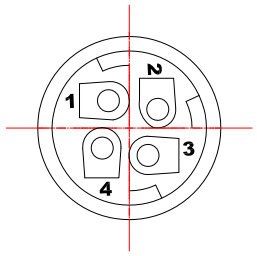


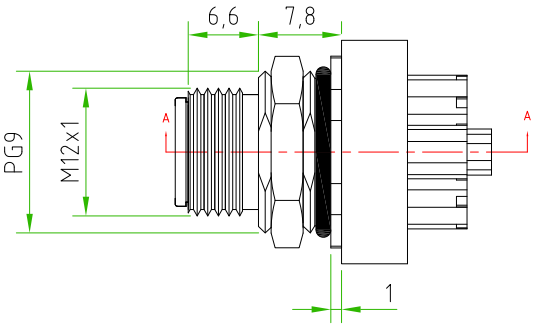


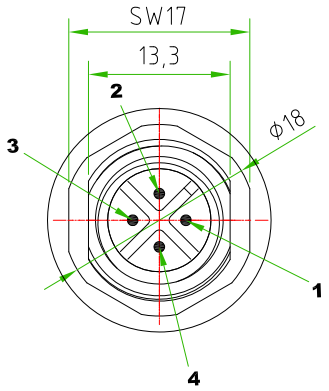


PANEL SIZE

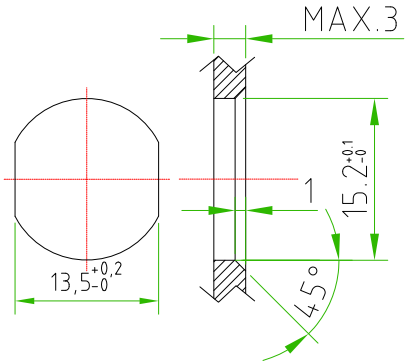


| | | | | | |
|---|---|---|---|---|---|
| TOLLERANZE | | DISEGNATORE LORENZO CIMMINO | DATA 25-10-2011 | SCALA | PESO |
| U.d.M | ANGOLO | CONTROLLATO | | | |
| DESCRIZIONE: M12 TO PANEL MALE 4POLES WITH CONTACTS TO CABLE | | | TIPO: M12 | | MATERIALE |
| H.T.P. HIGH TECH PRODUCTS | | | CODICE: 12MX4000-PG9-CUT | | |