

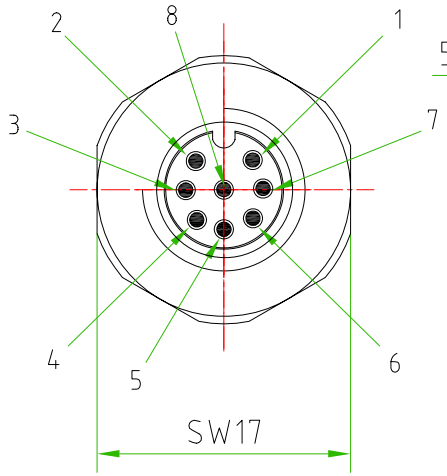

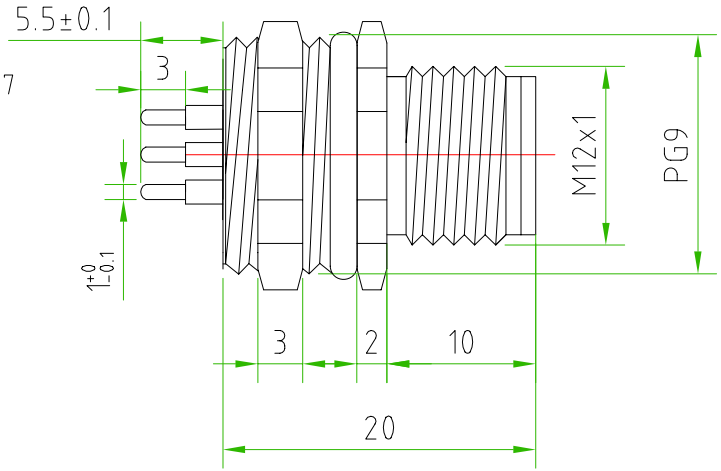

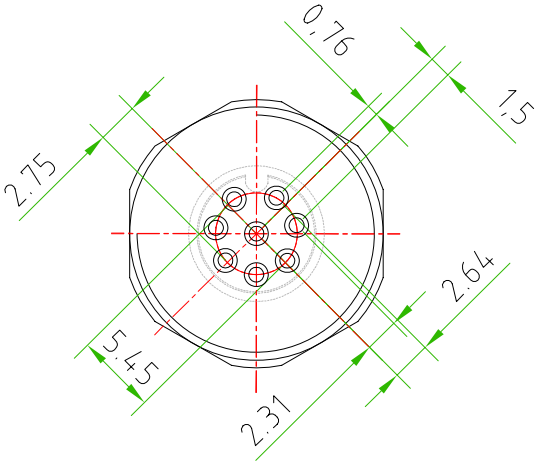

PANEL SIZE

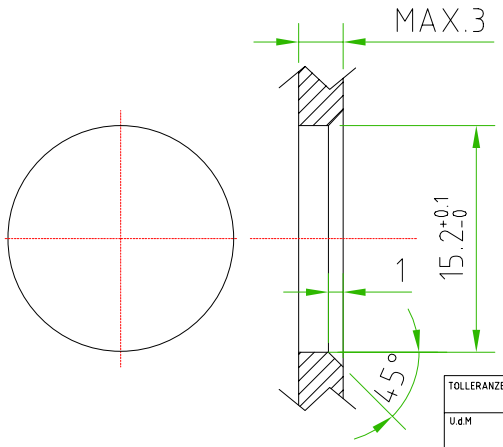

CONNECTOR FEATURES	CONNECTOR TYPE	M12 TO PANEL
	MOUNTING TYPE	FRONTAL
	CONTACT TYPE	MALE
	NUMBER OF CONTACTS CONNECTED	n°8
	HOUSING MATERIAL	Brass+nickel plated (CuZnNi)
	FIXING THREAD	PG9
	SWITCH FIXED NUT	SW17
	CONTACT TYPE	SOLDERED FOR PCB
	CONTACT LENGHT	5,5mm

TOLLERANZE ±0.2	DISEGNATORE LORENZO CIMMINO	DATA 09.05.11	SCALA 2:1		DISEGNO N.
U.d.M / ANGOLO	CONTROLLATO				
DESCRIZIONE: M12 MALE PANEL 8 POLES FRONTAL MOUNTING PG9 FOR PCB		TIPO: M12			MATERIALE
High Tech Products HTP H.T.P. HIGH TECH PRODUCTS		CODICE: 12MQ8000-PG9			