Frontal view

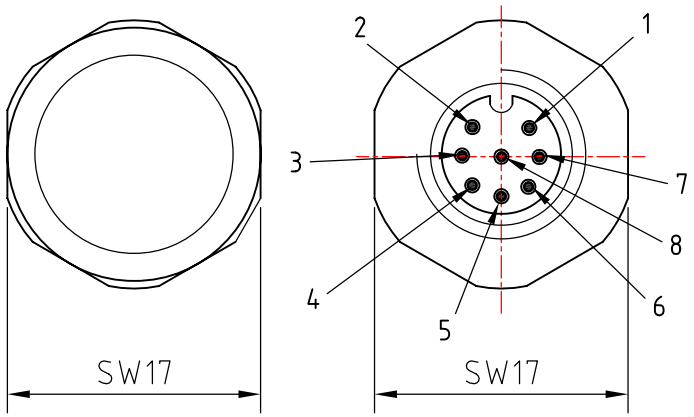

Lateral view

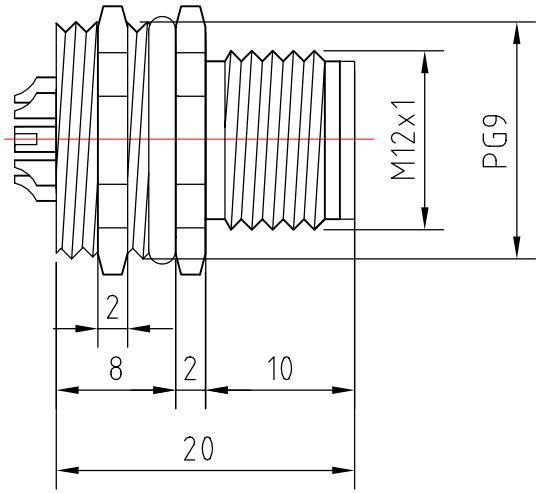

Back view

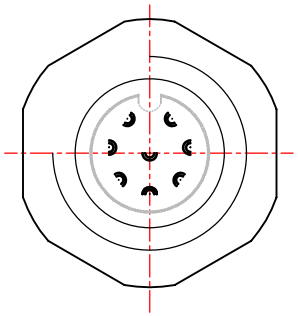

CONNECTOR FEATURES	
CONNECTOR TYPE	M12 TO PANEL
MOUNTING TYPE	FRONTAL
CONTACT TYPE	MALE
NUMBER OF CONTACTS CONNECTED	n°8
HOUSING MATERIAL	METAL (CuZn/Ni)
THREAD	PG9
SWITCH FIXED NUT	SW17
CONTACT TYPE	SOLDERED CONTACTS

TOLLERANZE ±0.2		DISEGNATORE LORENZO CIMMINO	DATA 24.08.10	SCALA 2:1		DISEGNO N.
U.d.M	ANGOLO	CONTROLLATO				
DESCRIZIONE M12 MALE PANEL 8 POLES FRONTAL MOUNTING PG9,WITH SOLDERED CONTACTS			TIPO M12			MATERIALE
H.T.P. HIGH TECH PRODUCTS			CODICE 12MP8000-PG9			