

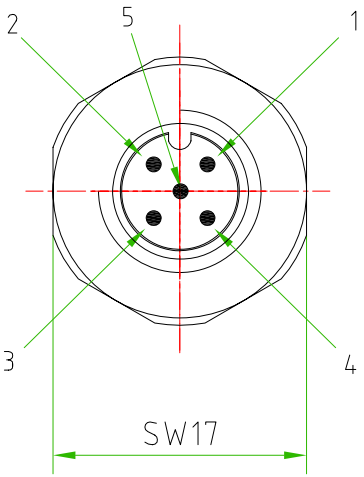

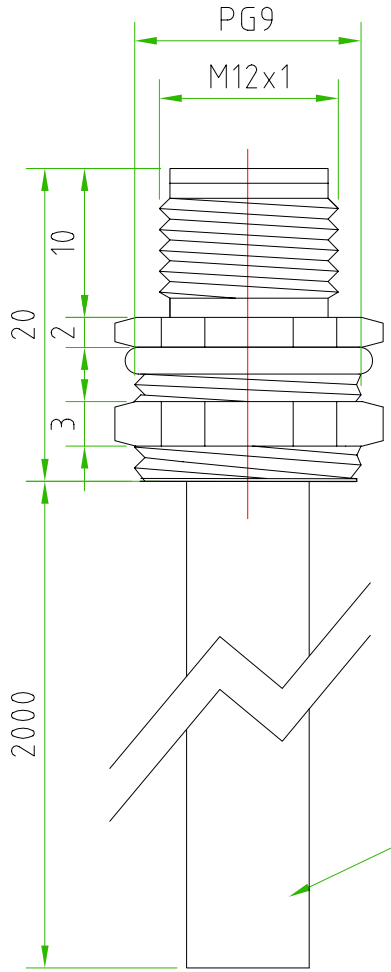

CONNECTOR FEATURES	
CONNECTOR TYPE	M12 TO PANEL
MOUNTING TYPE	FRONTAL
CONTACT TYPE	MALE
NUMBER OF CONTACTS CONNECTED	n°5
HOUSING MATERIAL	METAL (CuZn/Ni)
THREAD	PG9
SWITCH FIXED NUT	SW17
H.T.P.CABLE CODE	A
n°OF CONDUCTORS	5
CONDUCTOR SECTION	0.25mm²
CABLE MATERIAL	PVC CEI2022
CONDUCTOR INSULATION MATERIAL	PVC
COATING COLOUR	BLACK
CABLE LENGHT	2000mm

PANEL SIZE

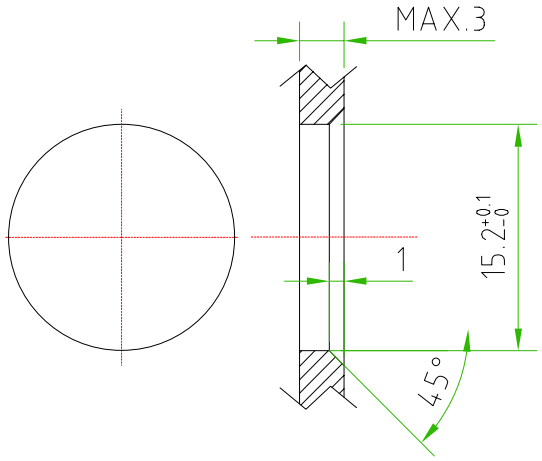

TOLLERANZE		DISEGNATORE LORENZO CIMMINO	DATA 20.07.11	SCALA 2:1	DISEGNO N.
U.d.M	ANGOLO	CONTROLLATO			
DESCRIZIONE: M12 MALE PANEL 5 POLES FRONTAL MOUNTING PG9 WITH CABLE PVC/PVC CEI2022 BALCK 5X0.25mm² L=2000mm			TIPO: M12		MATERIALE
High Tech Products HTP H.T.P. HIGH TECH PRODUCTS			CODICE: 12MP5A2Z-PG9-CO		