Rev.	Modify	Date	Signed	Approved
01	01	2017-04-18	L.C.	R.S.

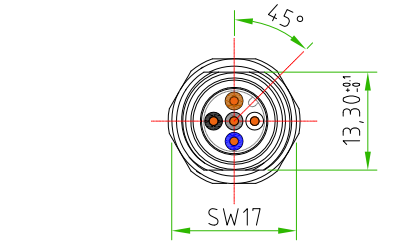

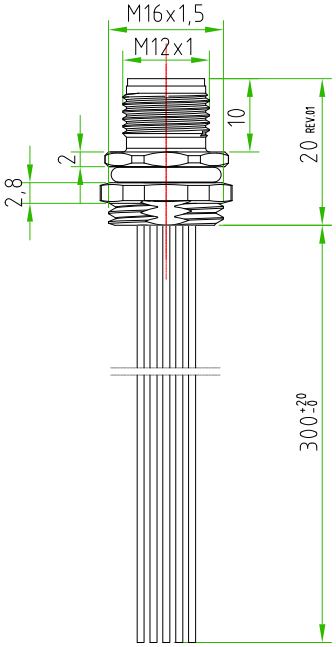

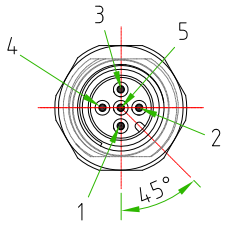

MOBILE NUT

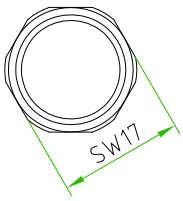



PAY ATTENTION to the position of the polarization key towards the CUT and the exagonal fixing nut.

BROWN 1
WHITE 2
BLUE 3
BLACK 4
GREY 5

CONNECTOR FEATURES	PRODUCT TYPE	M12 CIRCULAR CONNECTOR TO PANEL WITH WIRES
	TYPE MOUNTING	FRONTAL MOUNTING
	CONTACTS TYPE	MALE 5POLES
	NUMBER OF CONTACTS CONNECTED	N°5
	HOUSING MATERIAL	BRASS+NICKEL PLATED
	O-RING MATERIAL	NBR
	FIXING THREAD	M16X1,5
	SIZE CUT	13,30mm (+0,1/-0)
	SIZE FIXED NUT(SW)	SW17
	SIZE MOBILE NUT(SW)	SW17
	PROTECTION CLASS	IP67
	RATED VOLTAGE	60V AC/DC
	RATED CURRENT	4A
	CONNECTOR WITHOUT ANY LOGO	
WIRES FEATURES	NUMBER OF CONDUCTORS	N°5
	CONDUCTORS SECTION	0,25mm²
	CONDUCTORS INSULATION MATERIAL	PVC
	CONDUCTORS LENGHT	300mm

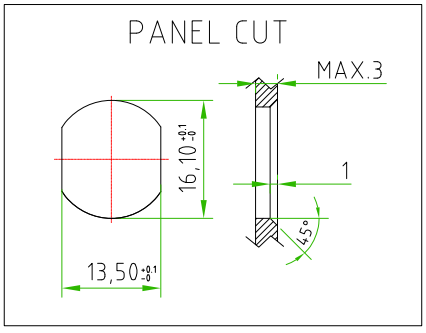

CUSTOMER APPROVAL	
SIGNATURE	DATE
PLEASE SIGN AND RETURN	

Designer	SUGLIANI R.	Date 2017-03-14	Tollerance ±0.3	Units: mm	Series M12	Drawing n. 1-1
Approved	CIMMINO L.	Date 2017-03-14	Scale 1:1	Size: A4	Customer code:	

A4

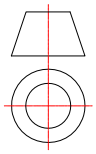

HTP™ High Tech Products S.R.L.

DESCRIPTION

CIRCULAR CONNECTOR M12,MALE,TO PANEL,5POLES,FRONTAL MOUNTING,M16X1,5 FIXING THREAD COMPLETE WITH CUT,WITH N°5 WIRES PVC 0,25mm² L=300mm
CONNECTOR WITHOUT ANY LOGO

H.T.P.PART NUMBER

12MP5A0C-M16-CUT

H.T.P. High Tech Products S.R.L. Via Lesina,45 -24030- Brembate di Sopra (Bg) - ITALY Phone:+39.035692509 Fax:+39.035203291 E-mail: info@webhtp.eu Web: http://www.webhtp.eu/

ALL RIGHTS ARE RESERVED.