Rev.	Modify	Date	Signed	Approved

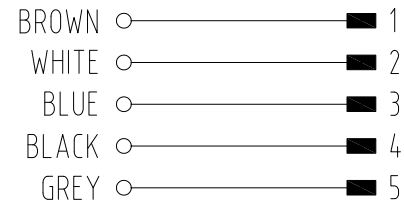

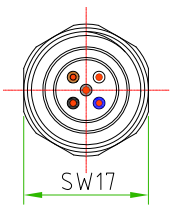

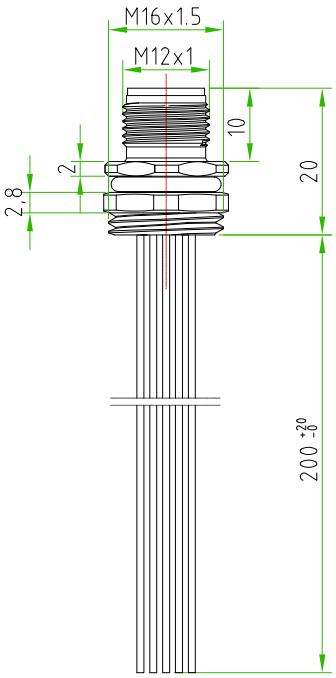

CONNECTOR FEATURES	PRODUCT TYPE	M12 CIRCULAR CONNECTOR TO PANEL WITH WIRES.
	TYPE MOUNTING	FRONTAL MOUNTING
	CONTACTS TYPE	MALE 5POLES
	NUMBER OF CONTACTS CONNECTED	N°5
	HOUSING MATERIAL	BRASS+NICKEL PLATED
	O-RING MATERIAL	NBR
	FIXING THREAD	M16X1.5
	SIZE FIXED NUT(SW)	SW17
	SIZE MOBILE NUT(SW)	SW17
	PROTECTION CLASS	IP67
	RATED VOLTAGE	60V AC/DC
	RATED CURRENT	4A
	CONNECTOR WITHOUT ANY LOGO	
WIRES FEATURES	NUMBER OF CONDUCTORS	N°5
	CONDUCTORS SECTION	0,25mm²
	CONDUCTORS INSULATION MATERIAL	PVC
	CONDUCTORS LENGHT	200mm

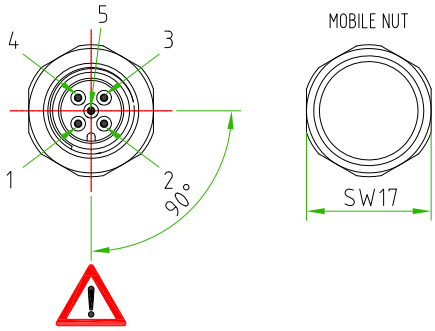

PAY ATTENTION to the position of the polarization key towards the exagonal fixing nut.

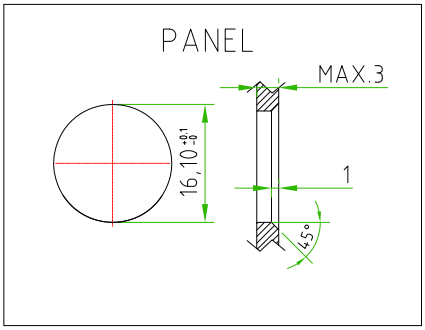

CUSTOMER APPROVAL	
SIGNATURE	DATE
PLEASE SIGN AND RETURN	

Designer	CIMMINO L.	Date 2018-04-17	Tollerance ±0.3	Units: mm	Series M12	Drawing n. 1-1
Approved	MAZZOLA M.	Date 2018-04-17	Scale 1:1	Size: A4	Customer code:	

A4

HTP™ High Tech Products S.R.L.

DESCRIPTION
CIRCULAR CONNECTOR M12,MALE,TO PANEL,5POLES,FRONTAL MOUNTING,
M16x1.5 THREAD,WITH N°5 WIRES PVC 0,25mm² L=200mm
CONNECTOR WITHOUT ANY LOGO

H.T.P.PART NUMBER

12MP5A0B-M16

H.T.P. High Tech Products S.R.L. Via Lesina,45 -24030- Brembate di Sopra (Bg) - ITALY Phone:+39.035692509 Fax:+39.035203291 E-mail: info@webhtp.eu Web: http://www.webhtp.eu/

ALL RIGHTS ARE RESERVED.