

Frontal view

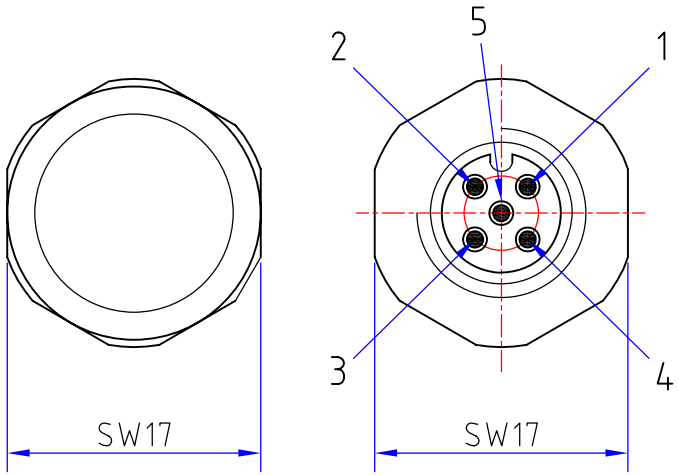

Lateral view

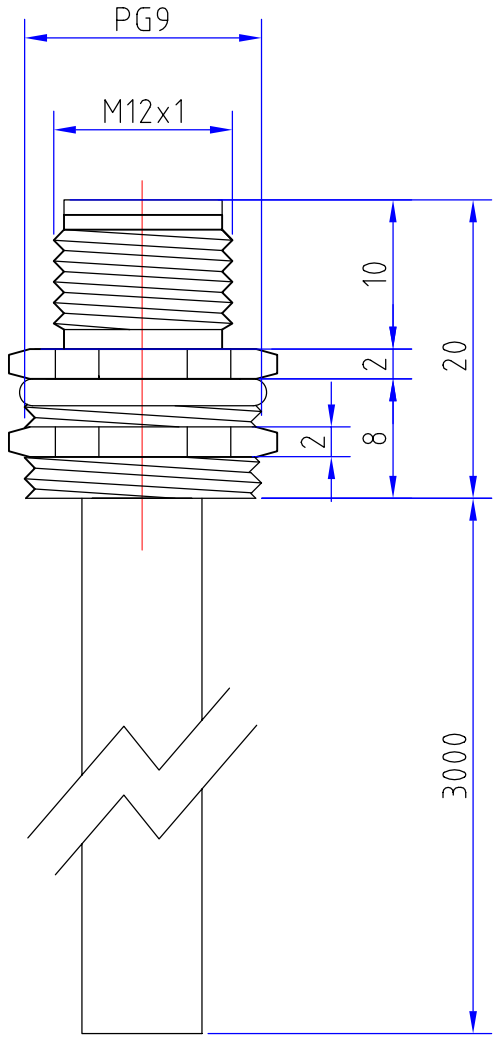

CONNECTOR FEATURES	CONNECTOR TYPE	M12 TO PANEL
	MOUNTING TYPE	FRONTAL
	CONTACT TYPE	MALE
	NUMBER OF CONTACTS CONNECTED	n°5
	HOUSING MATERIAL	METAL (CuZn/Ni)
	THREAD	PG9
	SWITCH FIXED NUT	SW17
	COATING COLOUR	VIOLET
	CABLE MATERIAL	PVC DEVICENET UL/CSA
	CABLE LENGHT	3000mm
	CONDUCTOR SECTION	1X2XAWG22/1X2XAWG24
	n°OF CONDUCTORS	4
CABLE SHIELDED		

TOLLERANZE	DISEGNATORE: LORENZO CIMMINO	DATA: 04.03.10	SCALA: 2:1		DISEGNO N.
U.d.M / ANGOLO	CONTROLLATO				
DESCRIZIONE: M12 MALE PANEL 5 POLES FRONTAL MOUNTING,PG9,WITH CABLE PVC,COLOUR VIOLET,1X2XAWG22+1X2XAWG24,SHIELDED, CABLE LENGHT 3m		TIPO: M12			MATERIALE
H.T.P. HIGH TECH PRODUCTS		CODICE: 12MP5213Z-PG9-C0			