Rev.	Modify	Date	Signed	Approved

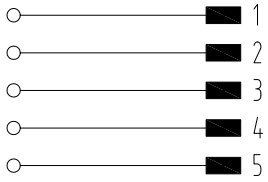

CONNECTOR FEATURES		
	PRODUCT TYPE	M12 CIRCULAR CONNECTOR TO PANEL WITH CONTACTS FOR SOLDER WIRES.
	TYPE MOUNTING	FRONTAL MOUNTING
	CONTACTS TYPE	MALE 5POLES
	NUMBER OF CONTACTS CONNECTED	N°5
	HOUSING MATERIAL	BRASS+NICKEL PLATED
	O-RING MATERIAL	NBR
	FIXING THREAD	PG9
	SIZE FIXED NUT(SW)	SW17
	SIZE MOBILE NUT(SW)	SW17
	PROTECTION CLASS	IP67
	RATED VOLTAGE	60V AC/DC
	RATED CURRENT	4A
	CONNECTOR WITHOUT ANY LOGO	

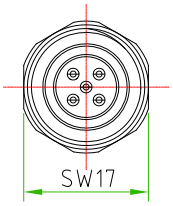

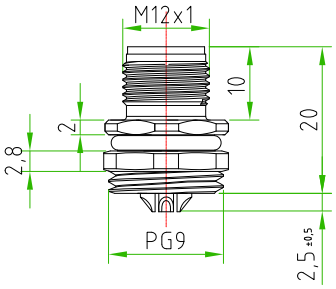

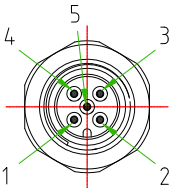

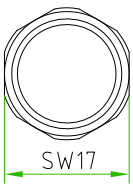



PAY ATTENTION to the position of the polarization key towards the exagonal fixing nut.

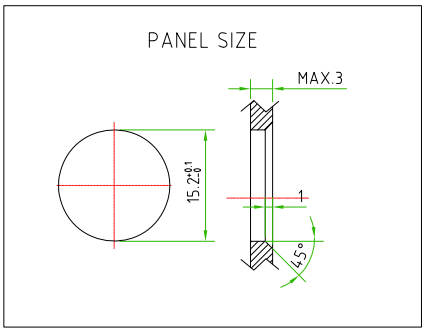

CUSTOMER APPROVAL	
SIGNATURE	DATE
PLEASE SIGN AND RETURN	

Designer	SUGLIANI R.	Date 2016-09-06	Tollerance ±0.3	Units: mm	Series M12	Drawing n. 1-1
Approved	CIMMINO L.	Date 2016-09-06	Scale 1:1	Size: A4	Customer code:	

A4

HTP™ High Tech Products S.R.L.

DESCRIPTION

CIRCULAR CONNECTOR M12,MALE,TO PANEL,5POLES,FRONTAL MOUNTING, PG9 THREAD,WITH CONTACTS FOR SOLDER WIRES. CONNECTOR WITHOUT ANY LOGO

H.T.P.PART NUMBER

12MP5000-PG9

H.T.P. High Tech Products S.R.L. Via Lesina,45 -24030- Brembate di Sopra (Bg) - ITALY Phone:+39.035692509 Fax:+39.035203291 E-mail: info@webhtp.eu Web: http://www.webhtp.eu/

ALL RIGHTS ARE RESERVED.