BROWN	1
BLUE	2
WHITE	3
GREEN	4
PINK	5
YELLOW	6
BLACK	7
GREY	8
RED	9
PURPLE	10
GREY/PINK	11
RED/BLUE	12

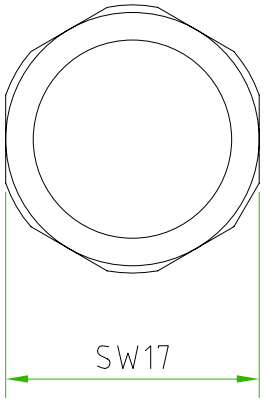

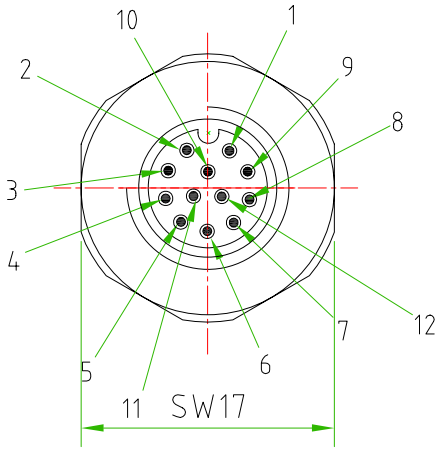

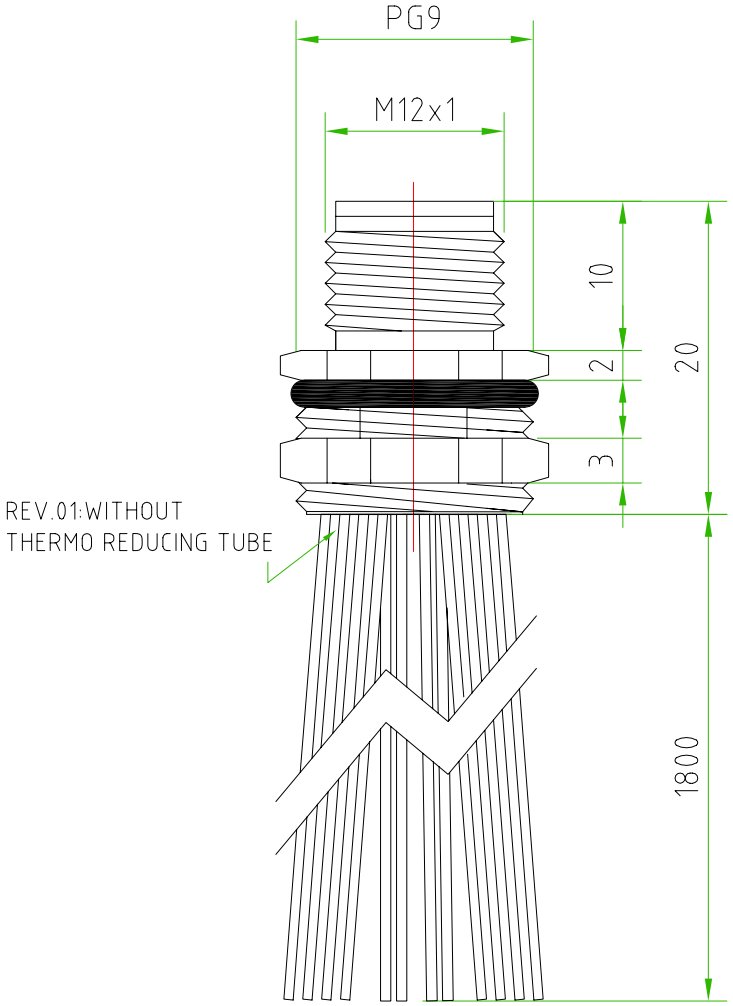

PANEL SIZE

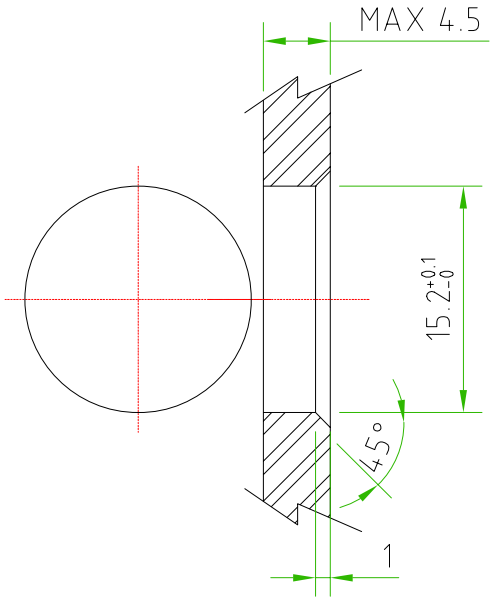

CONNECTOR FEATURES	
CONNECTOR TYPE	M12 TO PANEL
MOUNTING TYPE	FRONTAL
CONTACT TYPE	MALE
NUMBER OF CONTACTS CONNECTED	n°12
HOUSING MATERIAL	METAL (CuZn/Ni)
THREAD	PG9
SWITCH FIXED NUT	SW17
CONTACT TYPE	SOLDERED CONTACTS
CONDUCTOR MATERIAL	PVC
CONDUCTOR LENGHT	1800mm
CONDUCTOR SECTION	0.14mm²
n°OF CONDUCTORS	12
THERMO REDUCING TUBE	NO
PEELING AND TINNING	NO

DATE	REV.	DESCRIPTION	NAME
14.09.2011	01	WITHOUT THE THERME REDUCING TUBE	LORENZO CIMMINO

TOLLERANZE	DISEGNATORE	DATA	SCALA	DISEGNO N.
±0.2	LORENZO CIMMINO	29.03.11	2:1	
U.d.M / ANGOLO	CONTROLLATO			

DESCRIZIONE: M12 MALE PANEL 12 POLES FRONTAL MOUNTING
PG9,WITH N°12 WIRES 0.14mm² PVC L=1800mm

TIPO: M12

MATERIALE:

High Tech Products HTP — H.T.P. HIGH TECH PRODUCTS

CODICE: 12MP12K1H-PG9