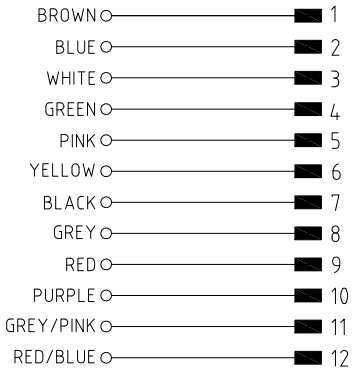

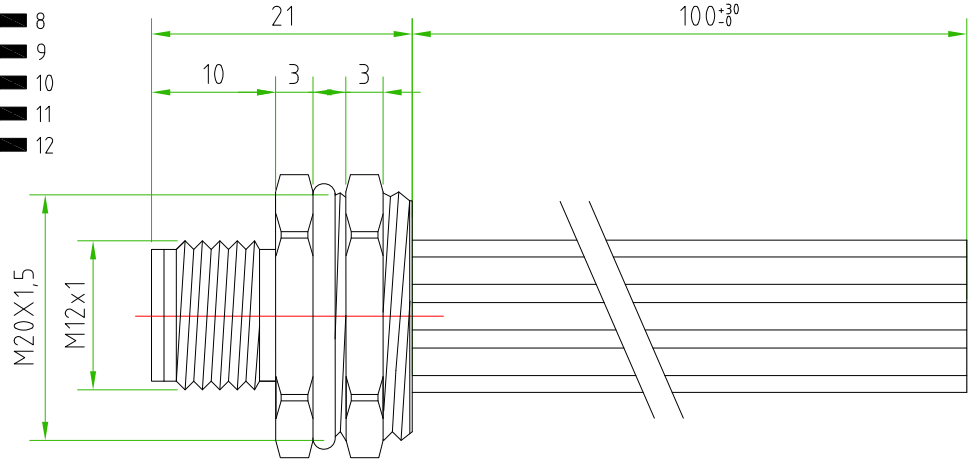

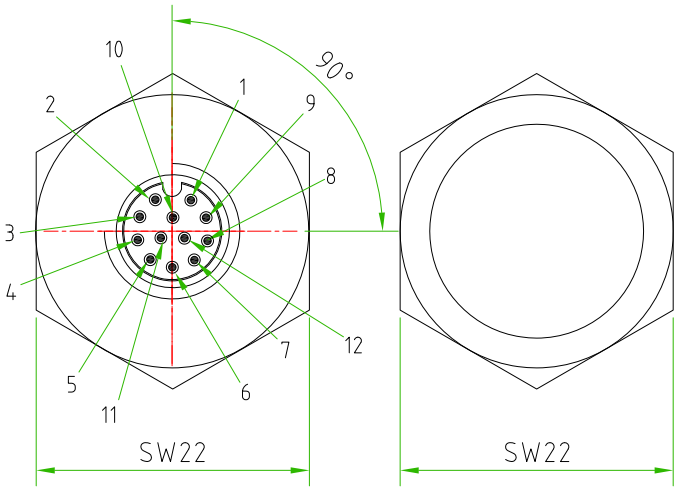

CONNECTOR FEATURES		
	CONNECTOR TYPE	M12 TO PANEL
	MOUNTING TYPE	FRONTAL
	CONTACT TYPE	MALE
	NUMBER OF CONTACTS CONNECTED	n°12
	HOUSING MATERIAL	Brass+nickel plated (CuZnNi)
	O-RING MATERIAL	NBR
	FIXING THREAD	M20X1,5
	SWITCH FIXED NUT	SW22
	CONDUCTOR MATERIAL	PVC
	CONDUCTOR LENGHT	100mm
	CONDUCTOR SECTION	0.14mm²
	n°OF CONDUCTORS	n°12
	RATED VOLTAGE	30V AC/DC
	RATED CURRENT	1,5A
	CONNECTOR WITHOUT H.T.P.LOGO	

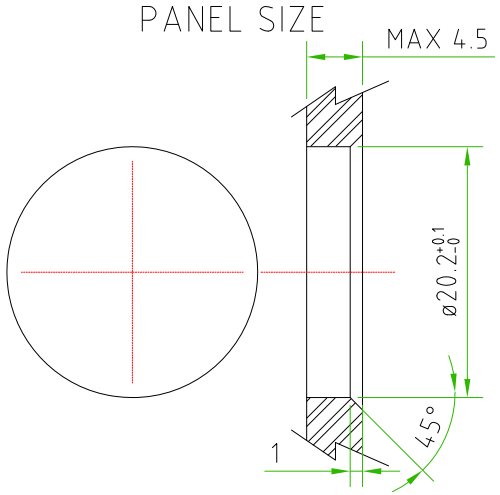

TOLLERANZE ±0.2		DISEGNATORE ROBERTO SUGLIANI	DATA 30.03.21	SCALA TO FIT		DISEGNO N.
U.d.M	ANGOLO	CONTROLLATO				
DESCRIZIONE M12 MALE PANEL 12 POLES FRONTAL MOUNTING M20X1,5,WITH N.12 WIRES 0.14mm² L=100mm CONNECTOR WITHOUT H.T.P.LOGO			TIPO M12			MATERIALE
H.T.P. HIGH TECH PRODUCTS			CODICE 12MP12K0A-M20			