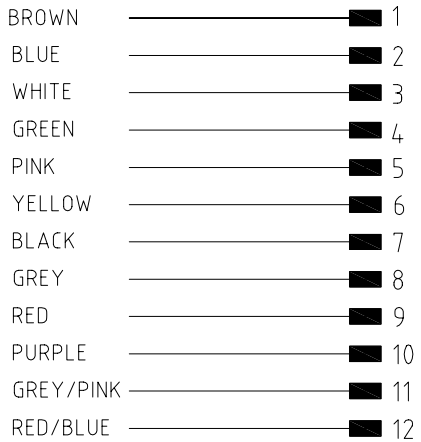

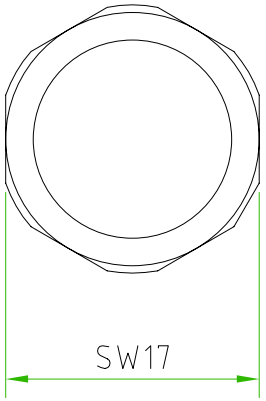

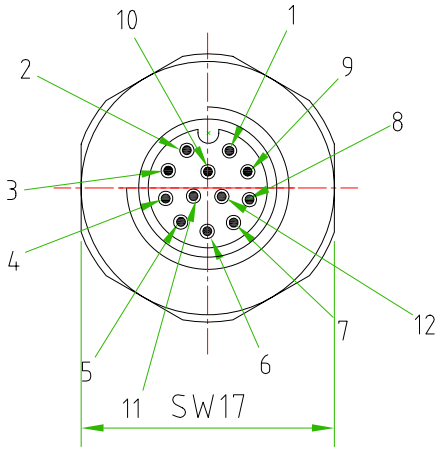

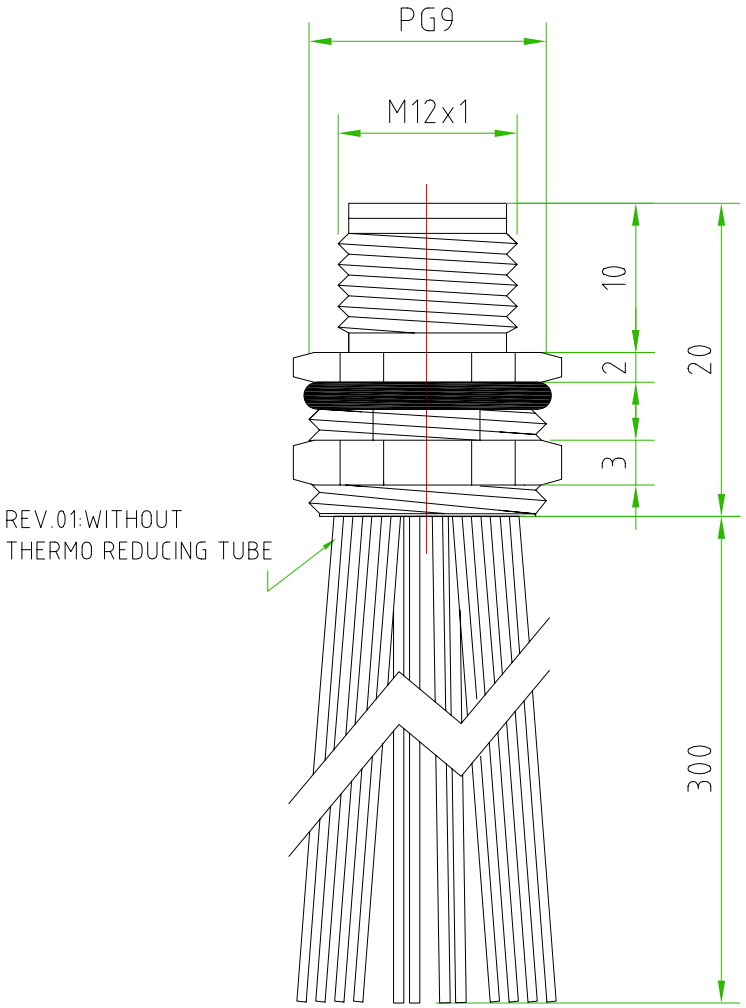

PANEL SIZE

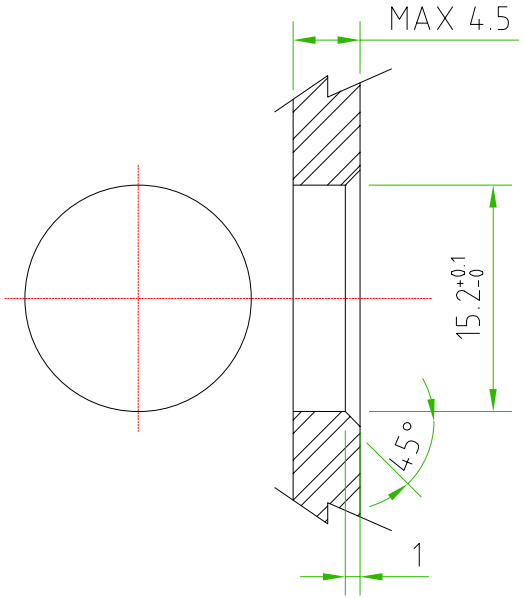

CONNECTOR FEATURES	
CONNECTOR TYPE	M12 TO PANEL
MOUNTING TYPE	FRONTAL
CONTACT TYPE	MALE
NUMBER OF CONTACTS CONNECTED	n°12
HOUSING MATERIAL	METAL (CuZn/Ni)
THREAD	PG9
SWITCH FIXED NUT	SW17
CONTACT TYPE	SOLDERED CONTACTS
CONDUCTOR MATERIAL	PVC
CONDUCTOR LENGHT	300mm
CONDUCTOR SECTION	0.25mm²
n°OF CONDUCTORS	12
THERMO REDUCING TUBE	NO
PEELING AND TINNING	NO

DATE	REV.	DESCRIPTION	NAME
14.09.2011	01	WITHOUT THE THERME REDUCING TUBE	LORENZO CIMMINO

TOLLERANZE	DISEGNATORE	DATA	SCALA	DISEGNO N.
±0.2	LORENZO CIMMINO	29.03.11	2:1	
U.d.M / ANGOLO	CONTROLLATO			

DESCRIZIONE: M12 MALE PANEL 12 POLES FRONTAL MOUNTING PG9,WITH N°12 WIRES 0.25mm² PVC L=300mm

TIPO: M12

MATERIALE:

H.T.P. HIGH TECH PRODUCTS

CODICE: 12MP12A0C-PG9