Rev.	Modify	Date	Signed	Approved

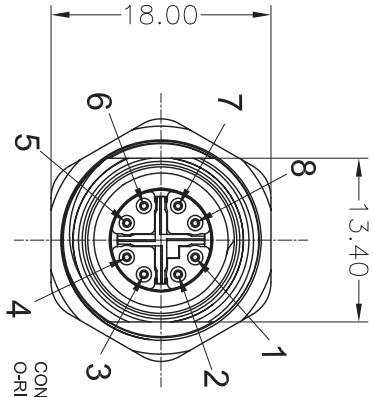

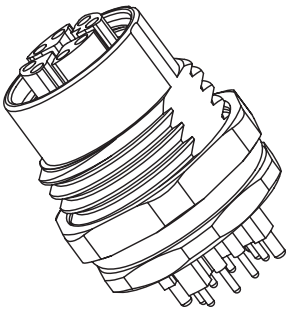

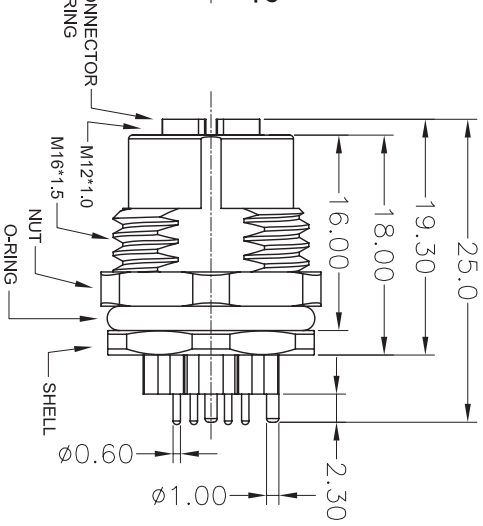

Detailed Product Description:
Waterproof connector rating is IP67/IP68
Protected from dust and water during immersion, resistant to many oils and chemical etc

Electrical character
Rating voltage: 48V AC/DC
Insulation resistance: >100MΩ
Rating current : 0.5A
Contact resistance ≤5mΩ

Other Specification
Contact PIN: Brass with Gold plating 30u".
Coupling nut/screw/shell: Brass with nickel plating
Insulation plastic: PA66+GF&TPU
Degree of protection: IP67/IP68
Operating temperature: -25°C ~ +85°C

*ALL MATERIALS ARE RoHS COMPLIANT.

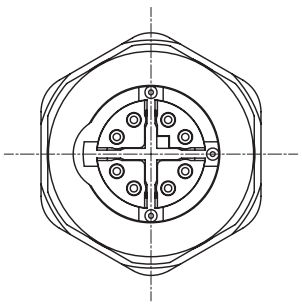

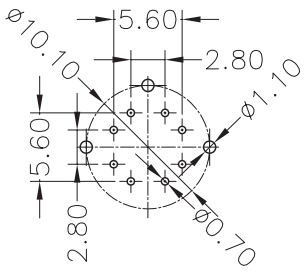

CUSTOMER APPROVAL	
SIGNATURE	DATE
PLEASE SIGN AND RETURN	

Designer	CIMMINO L.	Date	2015-03-02	Tollerance	±0.3	Units:	mm	Series M12	Drawing n. 1-1
Approved	MAZZOLA M.	Date	2015-03-02	Scale	1:1	Size:	A4	Customer code:	

A4

DESCRIPTION
CIRCULAR CONNECTOR M12 X-CODED,FEMALE,TO PANEL,8POLES, BACK MOUNTING,M16X1,5 FIXING THERAD,THREAD WITH CUT, AND SHIELD SHEET.

H.T.P.PART NUMBER
X-12FS8000-M16-CUTSH

H.T.P. High Tech Products S.R.L. Via Lesina,45 -24030- Brembate di Sopra (Bg) - ITALY Phone:+39.035692509 Fax:+39.035203291 E-mail: info@webhtp.eu Web: http://www.webhtp.eu/

ALL RIGHTS ARE RESERVED.