YELLOW/GREEN — 1
BLUE — 2
BROWN — 3

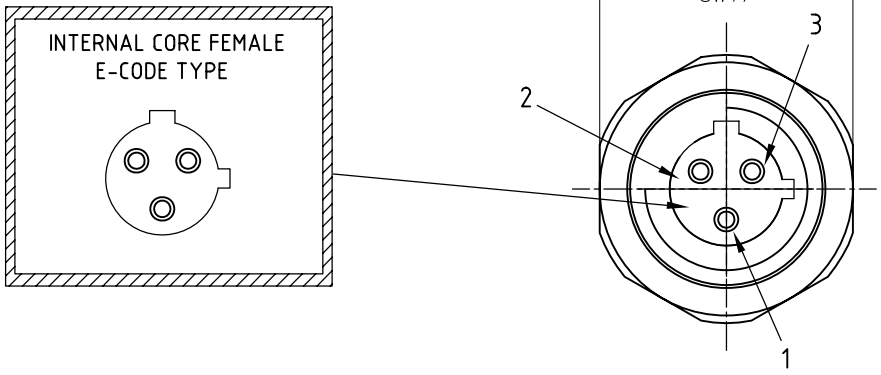

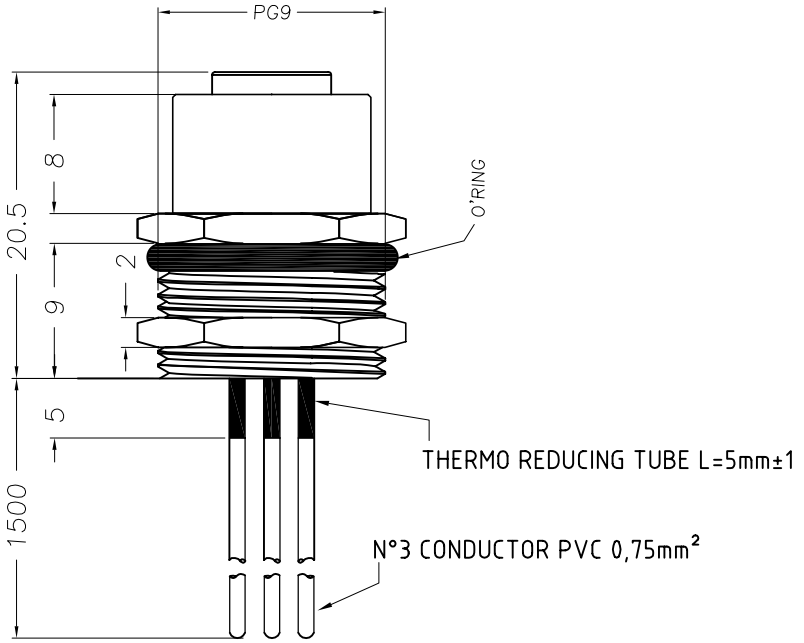

CONNECTOR FEATURES	
CONNECTOR E-TYPE	M12 TO PANEL
MOUNTING TYPE	FRONTAL
CONTACT TYPE	FEMALE
NUMBER OF CONTACTS CONNECTED	n°3
HOUSING MATERIAL	METAL (CuZn/Ni)
THREAD	PG9
SWITCH FIXED NUT	SW17
CONDUCTOR MATERIAL	PVC
CONDUCTOR LENGHT	1500mm
CONDUCTOR SECTION	0.75mm²
n°OF CONDUCTORS	3
THERMO REDUCING TUBE	L=5mm±1

TOLLERANZE		DISEGNATORE: LORENZO CIMMINO	DATA: 15.04.09	SCALA: 2:1	DISEGNO N.
U.d.M	ANGOLO	CONTROLLATO			
DESCRIZIONE: M12 FEMALE PANEL 3 POLES,E-TYPE, FRONTAL MOUNTING,PG9, WITH N°3 WIRES PVC 0,75mm²,L=1500mm			TIPO: M12		MATERIALE
H.T.P. HIGH TECH PRODUCTS			CODICE: E-12FP3031E-PG9-BRB		