Frontal view

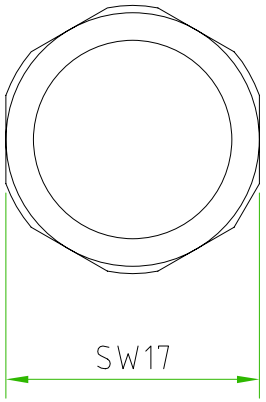

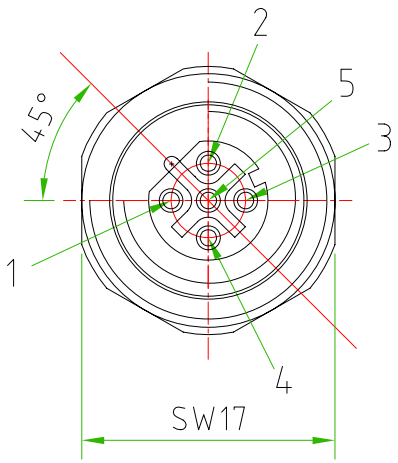

Lateral view

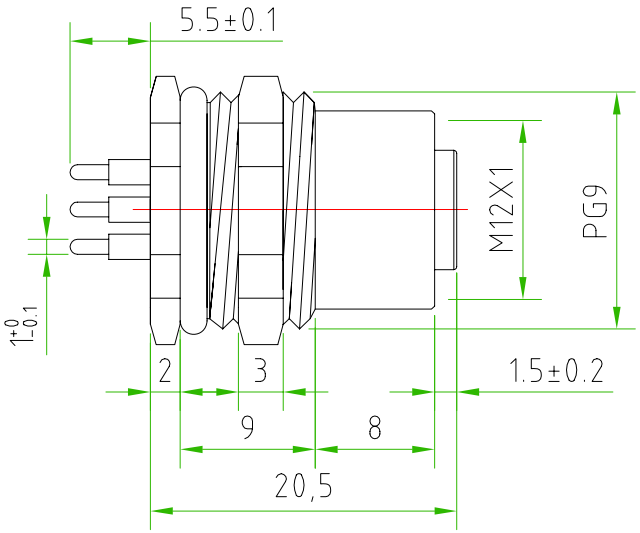

Back view

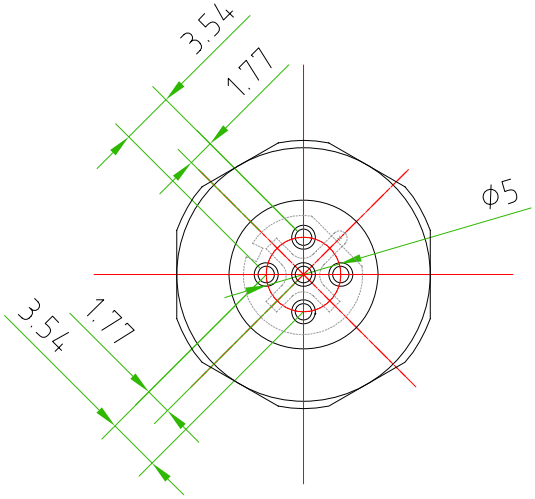

PANEL SIZE

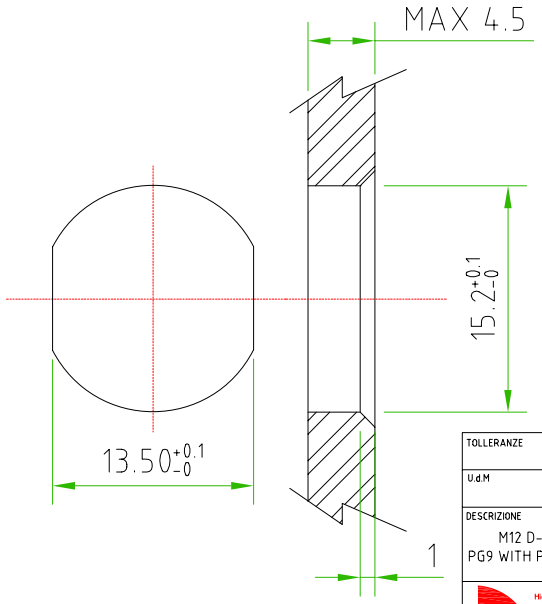

CONNECTOR FEATURES	
CONNECTOR TYPE	M12 TO PANEL D-CODED
MOUNTING TYPE	BACK
CONTACT TYPE	FEMALE
NUMBER OF CONTACTS CONNECTED	n°5
HOUSING MATERIAL	Brass+nickel plated (CuZnNi)
FIXING THREAD	PG9
SWITCH FIXED NUT	SW17
CONTACT TYPE	SOLDERED FOR PCB
CONTACT LENGHT	5,5mm ±0.1
SIZE CUT	13.3mm -0/+0.1

TOLLERANZE ±0.2		DISEGNATORE LORENZO CIMMINO	DATA 05.07.12	SCALA 2:1	DISEGNO N.
U.d.M	ANGOLO	CONTROLLATO			
DESCRIZIONE: M12 D-CODED FEMALE PANEL 5 POLES BACK MOUNTING PG9 WITH PCB CONTACTS.ON THE PG9 THREAD MUST BE THE CUT			TIPO: M12		MATERIALE
High Tech Products HTP H.T.P. HIGH TECH PRODUCTS			CODICE: D-12FS5000-PG9-CUT		