FRONTAL VIEW

PAY ATTENTION to the DOUBLE CUT of the thread and the positioning of the internal core

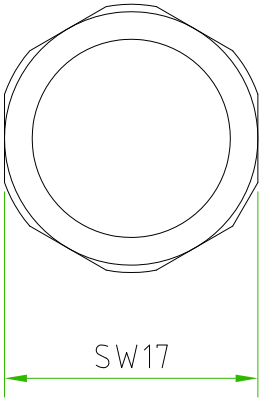

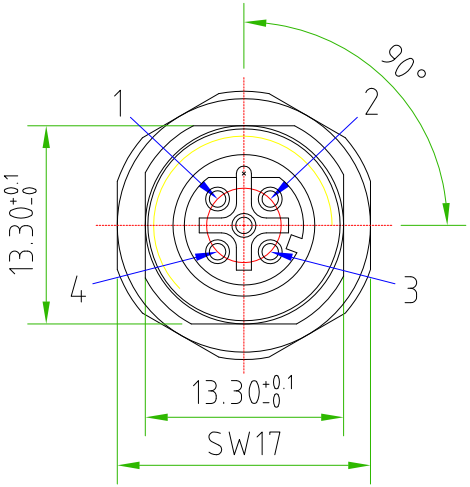

LATERAL VIEW

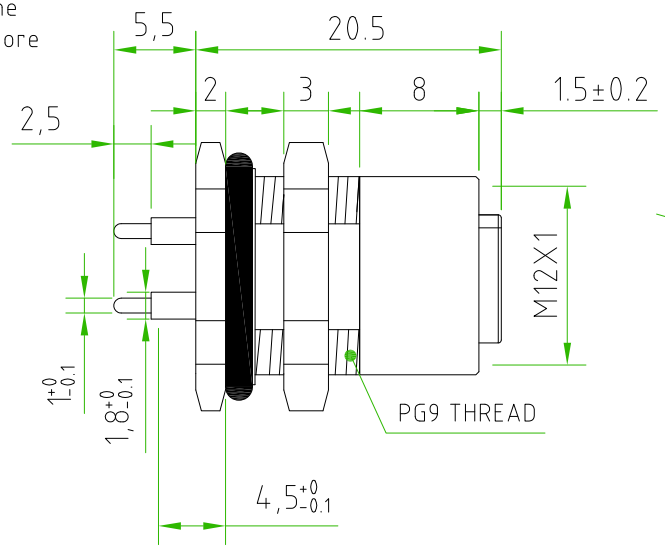

BACK VIEW

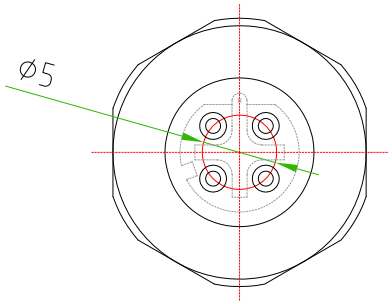

CONNECTOR FEATURES	
CONNECTOR TYPE	M12 TO PANEL D-CODED
MOUNTING TYPE	BACK
CONTACT TYPE	FEMALE
NUMBER OF CONTACTS CONNECTED	n°4
HOUSING MATERIAL	BRASS+NICKEL PLATED (CuZnNi)
FIXING THREAD	PG9
SWITCH FIXED NUT	SW17
CONTACT TYPE	PCB SOLDERED CONTACTS
CONTACT LENGHT	5,5mm ±0.1
SIZE CUT (X2)	13.3mm +0.1/-0
RATED VOLTAGE	60V AC/DC
RATED CURRENT	4A
CONNECTOR WITHOUT H.T.P.LOGO	

TOLLERANZE ±0.2	DISEGNATORE LORENZO CIMMINO	DATA 22.10.15	SCALA 2:1		DISEGNO N.
U.d.M / ANGOLO	CONTROLLATO				
DESCRIZIONE: M12 FEMALE PANEL 4 POLES D-CODED BACK MOUNTING PG9 WITH DOUBLE CUT. CONNECTOR WITHOUT H.T.P.LOGO		TIPO: M12			MATERIALE
H.T.P. HIGH TECH PRODUCTS		CODICE: D-12FS4000-PG9-2CUT			