

FRONTAL VIEW

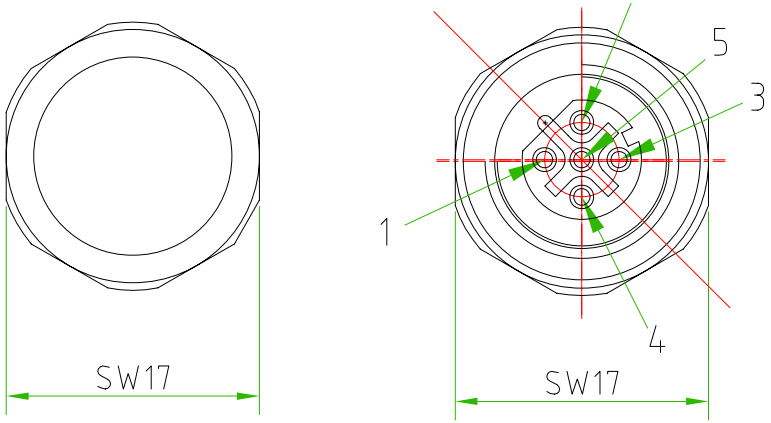

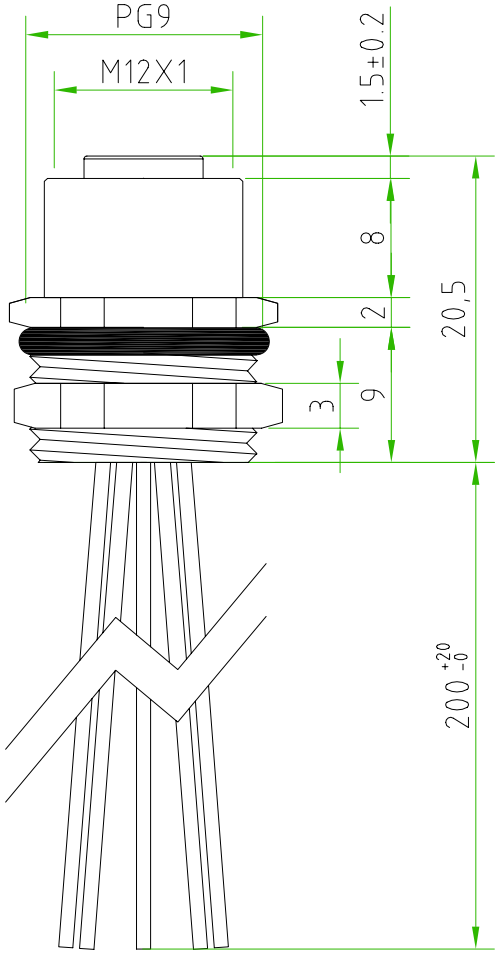

PANEL SIZE

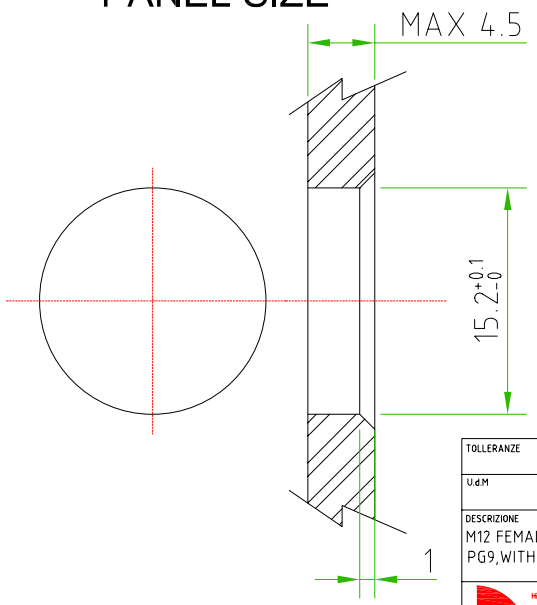

CONNECTOR FEATURES	
CONNECTOR TYPE	M12 TO PANEL D-CODED
MOUNTING TYPE	FRONTAL
CONTACT TYPE	FEMALE
NUMBER OF CONTACTS CONNECTED	n°5
HOUSING MATERIAL	Brass+nickel plated (CuZnNi)
FIXING THREAD	PG9
SWITCH FIXED NUT	SW17
CONDUCTOR MATERIAL	PVC
CONDUCTOR LENGHT	200mm
CONDUCTOR SECTION	0.25mm^2
n°OF CONDUCTORS	n°5
RATED VOLTAGE	60V
RATED CURRENT	4A

TOLLERANZE ±0.2	DISEGNATORE LORENZO CIMMINO	DATA 19.12.12	SCALA 2:1		DISEGNO N.
U.d.M / ANGOLO	CONTROLLATO				
DESCRIZIONE: M12 FEMALE PANEL 5 POLES,D-CODED,FRONTAL MOUNTING, PG9,WITH N°5 WIRES PVC 0,25mm^2,L=200mm		TIPO: M12			MATERIALE
H.T.P. HIGH TECH PRODUCTS		CODICE: D-12FP5A0B-PG9			