

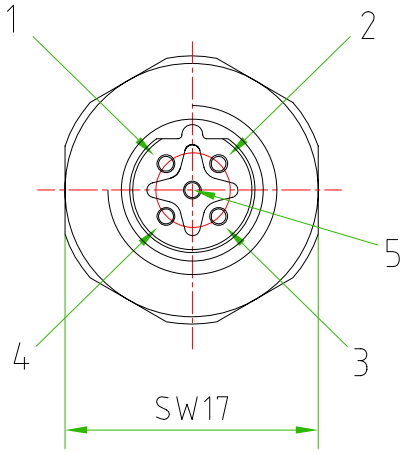

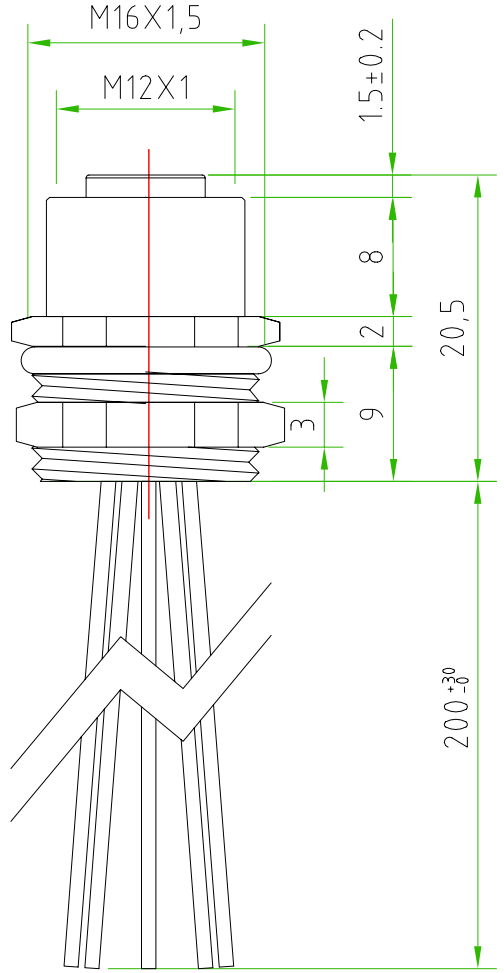

CONNECTOR FEATURES	
CONNECTOR TYPE	M12 TO PANEL B-CODED
MOUNTING TYPE	FRONTAL
CONTACT TYPE	FEMALE
NUMBER OF CONTACTS CONNECTED	n°5
HOUSING MATERIAL	Brass+nickel plated (CuZnNi)
FIXED THREAD	M16x1.5
SWITCH FIXED NUT	SW17
CONTACT TYPE	SOLDERED CONTACTS
CONDUCTOR MATERIAL	PVC
CONDUCTOR LENGHT	200mm
CONDUCTOR SECTION	0.25mm²
n°OF CONDUCTORS	5
RATED VOLTAGE	60V AC/DC
RATED CURRENT	4A

PANEL SIZE

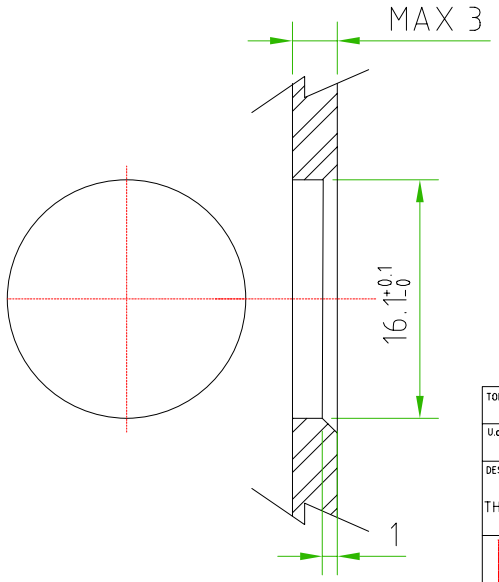

TOLLERANZE ±0.2	DISEGNATORE LORENZO CIMMINO	DATA 22.05.12	SCALA 2:1		DISEGNO N.
U.d.M / ANGOLO	CONTROLLATO				
DESCRIZIONE: M12 FEMALE 5 POLES B-CODED,FRONTAL MOUNTING,FIXING THREAD M16X1.5,WITH SOLDERED CONTACTS PVC 0.25mm² L=200mm		TIPO: M12			MATERIALE
High Tech Products HTP H.T.P. HIGH TECH PRODUCTS		CODICE: B-12FP5A0B-M16			