| Rev. | Modify | Date | Signed | Approved |
|---|---|---|---|---|
| | | | | |

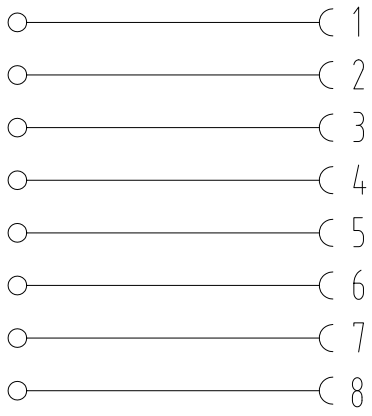


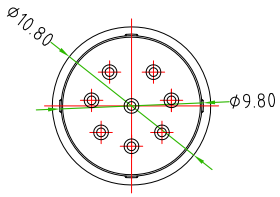


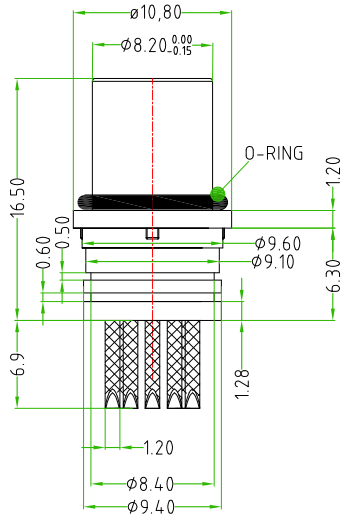


| CONNECTOR FEATURES | | |
|---|---|---|
| | PRODUCT TYPE | M12 INTERNALCORE |
| | INTERNAL CORE TYPE | FEMALE |
| | INTERNAL CORE MATERIAL | PA66 |
| | O-RING MATERIAL | NBR |
| | NUMBER OF CONTACTS | N°8 |
| | CONTACT TYPE | TO SOLDER WIRES |
| | RATED VOLTAGE | 30V AC/DC |
| | RATED CURRENT | 2A |
| | INTERNAL CORE WITHOUT ANY LOGO | |

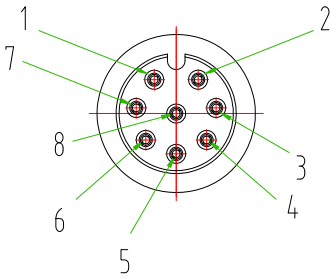


| CUSTOMER APPROVAL | |
|---|---|
| SIGNATURE | DATE |
| | |
| PLEASE SIGN AND RETURN | |

| Designer | CIMMINO L. | Date 2018-04-27 | Tollerance ±0.2 | Units: mm | Series M12 | Drawing n. 1-1 |
|---|---|---|---|---|---|---|
| Approved | MAZZOLA M. | Date 2018-04-27 | Scale 2:1 | Size: A4 | Customer code: | |

A4

DESCRIPTION

M12 INTERNAL CORE OF CIRCULAR CONNECTOR ,FEMALE,8 POLES, CONTACTS TO SOLDER WIRES,COMPLETE OF O-RING,WITHOUT ANY LOGO.

H.T.P.PART NUMBER

12FN8000

H.T.P. High Tech Products S.R.L. Via Lesina,45 -24030- Brembate di Sopra (Bg) - ITALY Phone:+39.035692509 Fax:+39.035203291 E-mail: info@webhtp.eu Web: http://www.webhtp.eu/

ALL RIGHTS ARE RESERVED.