Rev.	Modify	Date	Signed	Approved

BROWN — 1
WHITE — 2
BLUE — 3
BLACK — 4

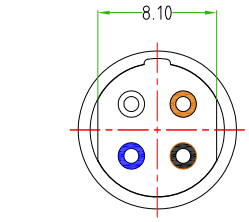

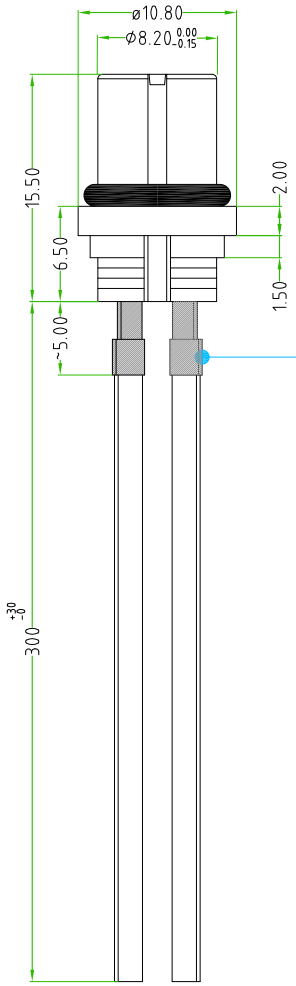

INTERNAL CORE DETAILS:

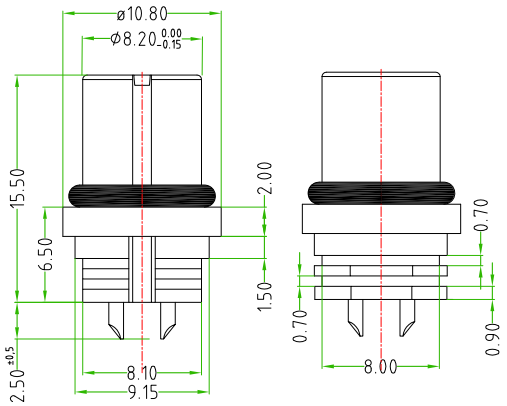

CONNECTOR FEATURES	PRODUCT TYPE	M12 INTERNALCORE OF PANEL CONNECTOR WITH SOLDER WIRES
	INTERNAL CORE TYPE	FEMALE
	INTERNAL CORE MATERIAL	PA66
	O-RING MATERIAL	NBR
	NUMBER OF CONTACTS	N°4
	CONTACT TYPE	SOLDER
	RATED VOLTAGE	250V AC/DC
	RATED CURRENT	4A
WIRES FEATS	NUMBER OF CONDUCTORS	N°4
	CONDUCTORS SECTION	0,25mm^2
	CONDUCTORS INSULATION MATERIAL	PVC
	CONDUCTORS LENGTH	300mm

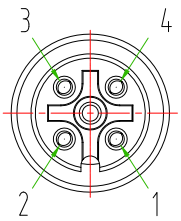

CUSTOMER APPROVAL	
SIGNATURE	DATE
PLEASE SIGN AND RETURN	

Designer	CIMMINO L.	Date 2021-01-14	Tollerance ±0.2	Units: mm	Series M12	Drawing n. 1-1
Approved	SUGLIANI R.	Date 2021-01-14	Scale 2:1	Size: A4	Customer code:	

A4

HTP™ High Tech Products S.R.L.

DESCRIPTION

M12 INTERNAL CORE OF CIRCULAR CONNECTOR TO PANEL, FEMALE,4 POLES, WITH NBR O-RING, COMPLETE WITH PVC 0,25mm^2 SOLDERED WIRES L=300mm. CONNECTOR WITHOUT ANY LOGO

H.T.P.PART NUMBER

12FN4A0C

H.T.P. High Tech Products S.R.L. Via Lesina,45 -24030- Brembate di Sopra (Bg) - ITALY Phone:+39.035692509 Fax:+39.035203291 E-mail: info@webhtp.eu Web: http://www.webhtp.eu/

ALL RIGHTS ARE RESERVED.