Rev.	Modify	Date	Signed	Approved

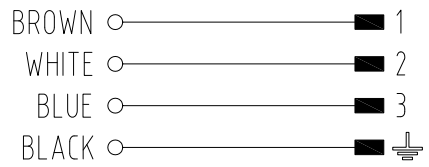

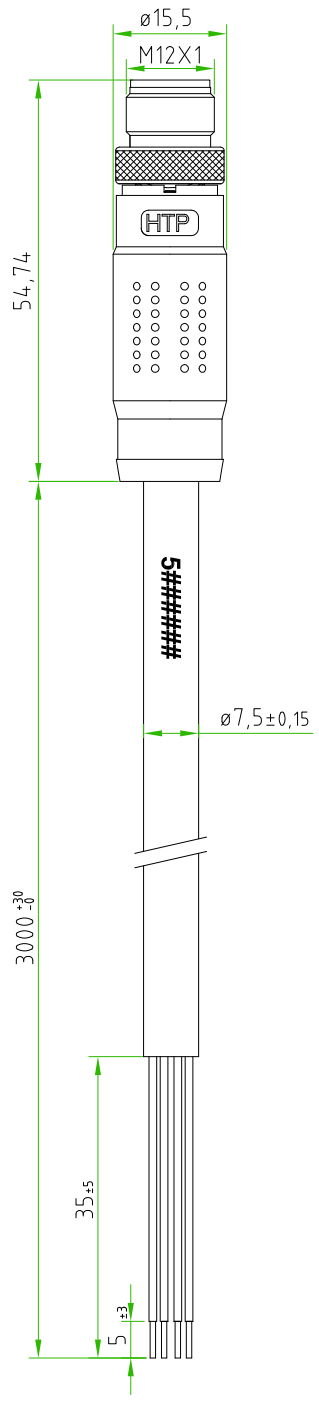

CONNECTOR FEATURES	PRODUCT TYPE	M12 S-CODED CIRCULAR CONNECTOR WITH MOULDED CABLE
	CONNECTOR TYPE	STRAIGHT 180°
	CONTACTS TYPE	MALE 4POLES
	MALE INTERNAL CORE MATERIAL	GRILON TSG-30/4 V0 (PA66+30%GLASS FIBRE)
	NUMBER OF CONTACTS CONNECTED	N°4
	PROTECTION CLASS	IP69K
	RATED VOLTAGE	630V AC
	RATED CURRENT	12A
	CONNECTOR WITH H.T.P.LOGO	
CABLE FEATURES	H.T.P.CABLE CODE	CAVO CD
	NUMBER OF CONDUCTORS	N°4
	CONDUCTORS SECTION	1mm²
	CABLE DIAMETER	ø7,5±0,15mm
	CABLE MATERIAL	PVC CEI2022
	COATING COLOUR	BLACK
	CONDUCTORS INSULATION MATERIAL	PVC
	CABLE LENGHT	3000mm
	STRIPPING	35mm (STANDARD)
	PEELING AND TINNING	5mm (STANDARD)
	ON THE CABLE,NEAR THE CONNECTOR HEAD,MUST BE SILK PRINTED THE H.T.P. PRODUCTION DATE CODE 5######	

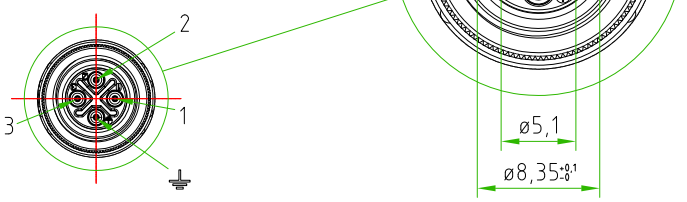

CUSTOMER APPROVAL	
SIGNATURE	DATE
PLEASE SIGN AND RETURN	

Designer	SUGLIANI R.	Date 2018-02-06	Tollerance ±0.3	Units: mm	Series M12 S-CODED	Drawing n. 1-1
Approved	CIMMINO L.	Date 2018-02-06	Scale 1:1	Size: A4	Customer code:	

A4

DESCRIPTION

S-CODED CIRCULAR CONNECTOR M12,MALE,STRAIGHT 180°, 4POLES,WITH CABLE PVC/PVC, 4G1mm², CEI2022, L=3m. CONNECTOR WITH H.T.P.LOGO

H.T.P.PART NUMBER

S-12MD4CD3Z

H.T.P. High Tech Products S.R.L. Via Lesina,45 -24030- Brembate di Sopra (Bg) - ITALY Phone:+39.035692509 Fax:+39.035203291 E-mail: info@webhtp.eu Web: http://www.webhtp.eu/

ALL RIGHTS ARE RESERVED.