BROWN	1
BLUE	2
WHITE	3
GREEN	4
PINK	5
YELLOW	6
BLACK	7
GREY	8
RED	9
PURPLE	10
GREY/PINK	11
RED/BLUE	12

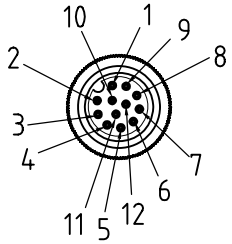

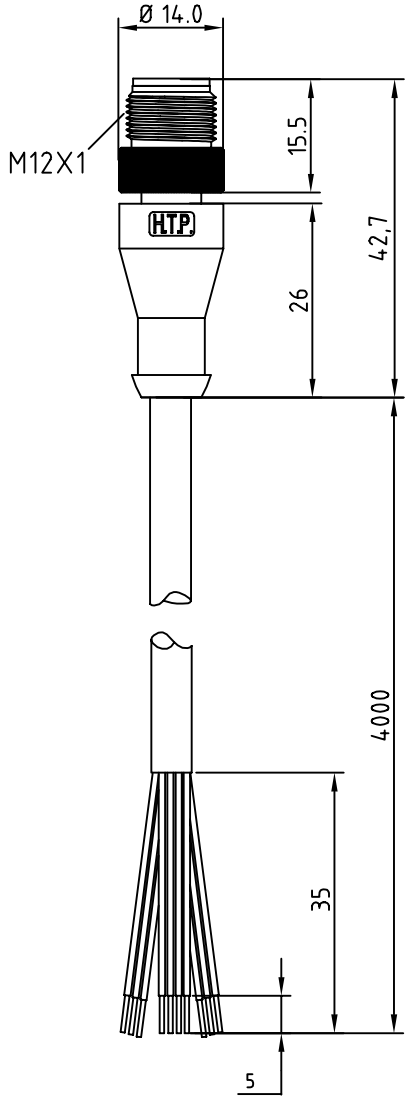

CONNECTOR FEATURES	TYPE CONTACT	MALE 12POLES
	CABLE LENGHT	4000mm
	PROTECTION CLASS	IP69K
	STRIPPING	35mm STANDARD
	PEELING	5mm STANDARD
	NUMBER OF CONTACTS CONNECTED	N°12
CABLE FEATURES	H.T.P.CABLE CODE	22
	NUMBER OF CONDUCTORS	n°12
	CONDUCTOR SECTION	0.14mm²
	CABLE MATERIAL	PVC
	COATING COLOUR	GREY
	CONDUCTOR INSULATION MATERIAL	PVC

TOLLERANZE		DISEGNATORE LORENZO CIMMINO	DATA 25.03.09	SCALA 1:1	DISEGNO N.
U.d.M	ANGOLO	CONTROLLATO			
DESCRIZIONE: M12 MALE 180° 12 POLES,WITH CABLE PVC/PVC,GREY, CEI2022,12X0.14mm²,L=4m			TIPO: M12		MATERIALE
H.T.P. HIGH TECH PRODUCTS			CODICE: 12MD1224Z		