BROWN — 1

BLUE — 3

BLACK — 4

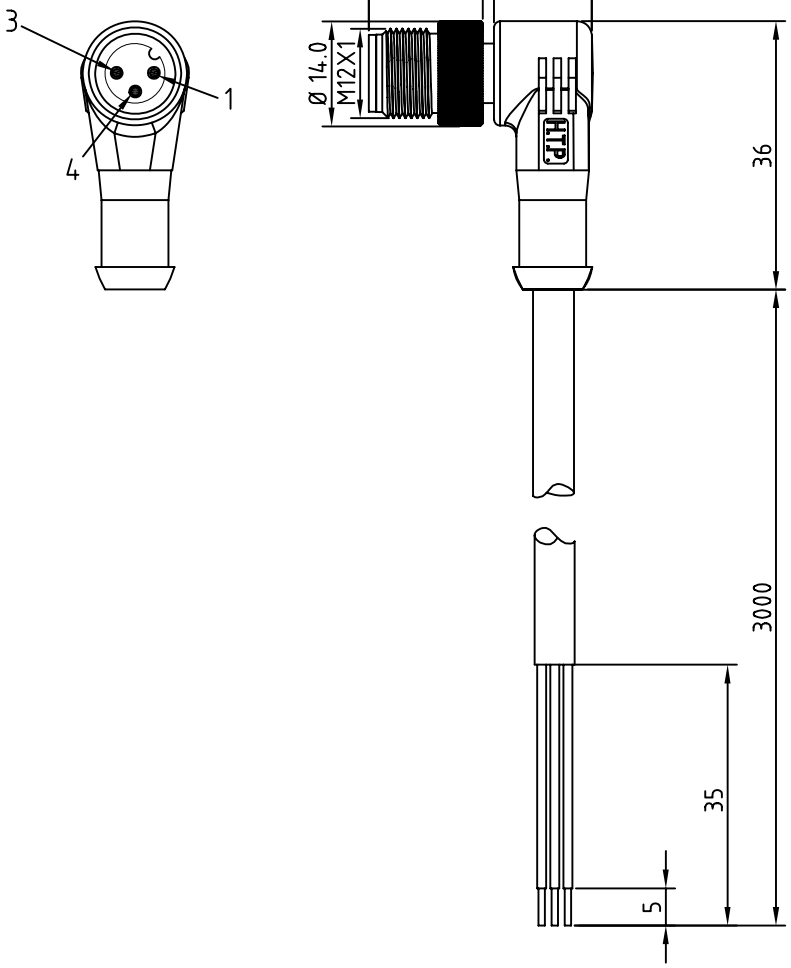

CONNECTOR FEATURES	CONNECTOR TYPE	M12
	CONTACT TYPE	MALE 3POLES
	CABLE LENGHT	3000mm
	PROTECTION CLASS	IP69K
	STRIPPING	35mm STANDARD
	PEELING	5mm STANDARD
	NUMBER OF CONTACTS CONNECTED	N°3
	CONNECTOR WITH H.T.P.LOGO	
CABLE FEATURES	H.T.P.CABLE CODE	L
	NUMBER OF CONDUCTORS	N°3
	CONDUCTOR SECTION	0.34mm²
	CABLE MATERIAL	PVC CEI2022
	COATING COLOUR	BLACK
	CONDUCTOR INSULATION MATERIAL	PVC

TOLLERANZE		DISEGNATORE LORENZO CIMMINO	DATA 25.08.09	SCALA 1:1		DISEGNO N.
U.d.M	ANGOLO	CONTROLLATO				
DESCRIZIONE M12 MALE 90° 3 POLES,WITH CABLE PVC/PVC,CEI2022,3X0.34mm²,GREY,L=3m			TIPO M12			MATERIALE
H.T.P. HIGH TECH PRODUCTS			CODICE 12MA3L3Z			