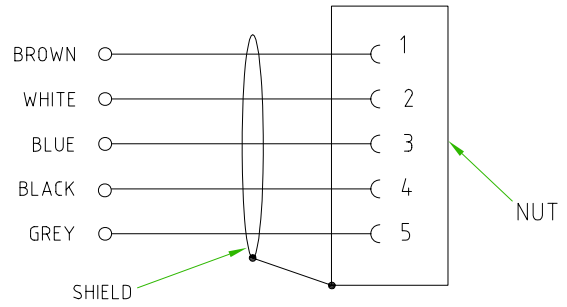

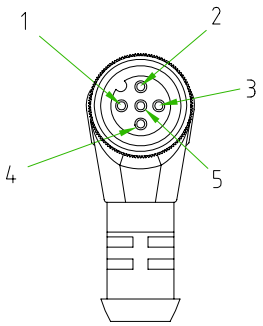

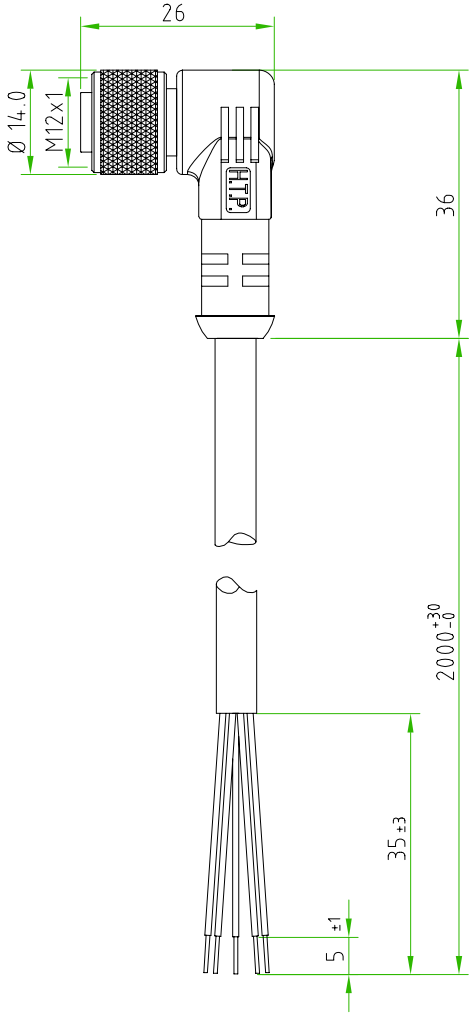

CONNECTOR FEATURES	CONNECTOR TYPE	M12 90°
	CONTACT TYPE	FEMALE 5POLES
	CABLE LENGHT	2000mm
	PROTECTION CLASS	IP69K
	STRIPPING	35mm STANDARD
	PEELING AND TINNING	5mm STANDARD
	NUMBER OF CONTACTS CONNECTED	N°5
	TOTALLY SHIELDED CONNECTOR(SHIELD CONNECTED TO THE NUT)	
	CONNECTOR WITH H.T.P.LOGO	
CABLE FEATURES	H.T.P.CABLE CODE	R
	NUMBER OF CONDUCTORS	N°5
	CONDUCTOR SECTION	0.34mm²
	CABLE MATERIAL	PVC CEI2022
	COATING COLOUR	GREY RAL7032
	CONDUCTOR INSULATION MATERIAL	PVC
	CABLE SHIELDED	

TOLLERANZE ±0.3	DISEGNATORE LORENZO CIMMINO	DATA 27.09.12	SCALA 1:1		DISEGNO N.
U.d.M / ANGOLO	CONTROLLATO				
DESCRIZIONE: M12 FEMALE 90° 5 POLES,TOTALLY SHIELDED,WITH CABLE PVC/PVC CEI2022 SHIELDED 5X0.34mm² GREY L=2m		TIPO: M12			MATERIALE
High Tech Products HTP H.T.P. HIGH TECH PRODUCTS		CODICE: 12FV5R2Z			