

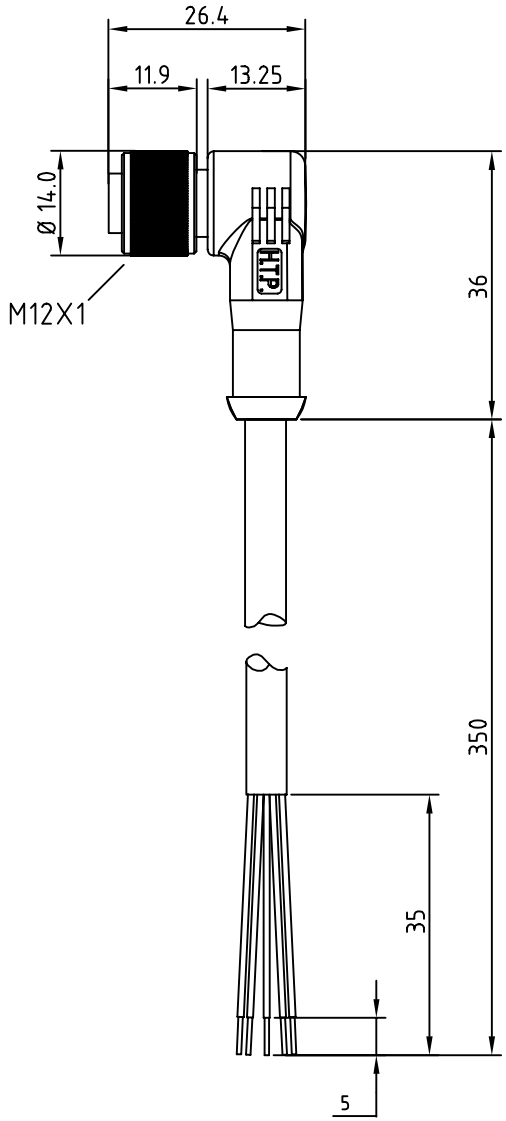

CONNECTOR FEATURES	TYPE CONTACT	FEMALE 5POLES
	CABLE LENGHT	350mm
	PROTECTION CLASS	IP69K
	STRIPPING	35mm STANDARD
	PEELING	5mm STANDARD
	NUMBER OF CONTACTS CONNECTED	N°5
	TOTALLY SHIELDED CONNECTOR(SHIELD CONNECTED TO THE NUT)	
CABLE FEATURES	H.T.P.CABLE CODE	F
	NUMBER OF CONDUCTORS	n°5
	CONDUCTOR SECTION	0.34mm²
	CABLE MATERIAL	PVC CEI2022
	COATING COLOUR	BLACK
	CONDUCTOR INSULATION MATERIAL	PVC
	CABLE SHIELDED	

TOLLERANZE		DISEGNATORE LORENZO CIMMINO	DATA 24.08.09	SCALA 1:1	DISEGNO N.
U.d.M	ANGOLO	CONTROLLATO			
DESCRIZIONE: M12 CONNECTOR FEMALE 90°,5POLES,TOTALLY SHIELDED,WITH CABLE PVC/PVC,5X0,34mm²,BLACK,SHIELDED,LENGHT 0,35m			TIPO: M12		MATERIALE
H.T.P. HIGH TECH PRODUCTS			CODICE: 12FV5F0C5		