Rev.	Modify	Date	Signed	Approved

Rev.	Modify	Date	Signed	Approved

Rev.	Modify	Date	Signed	Approved

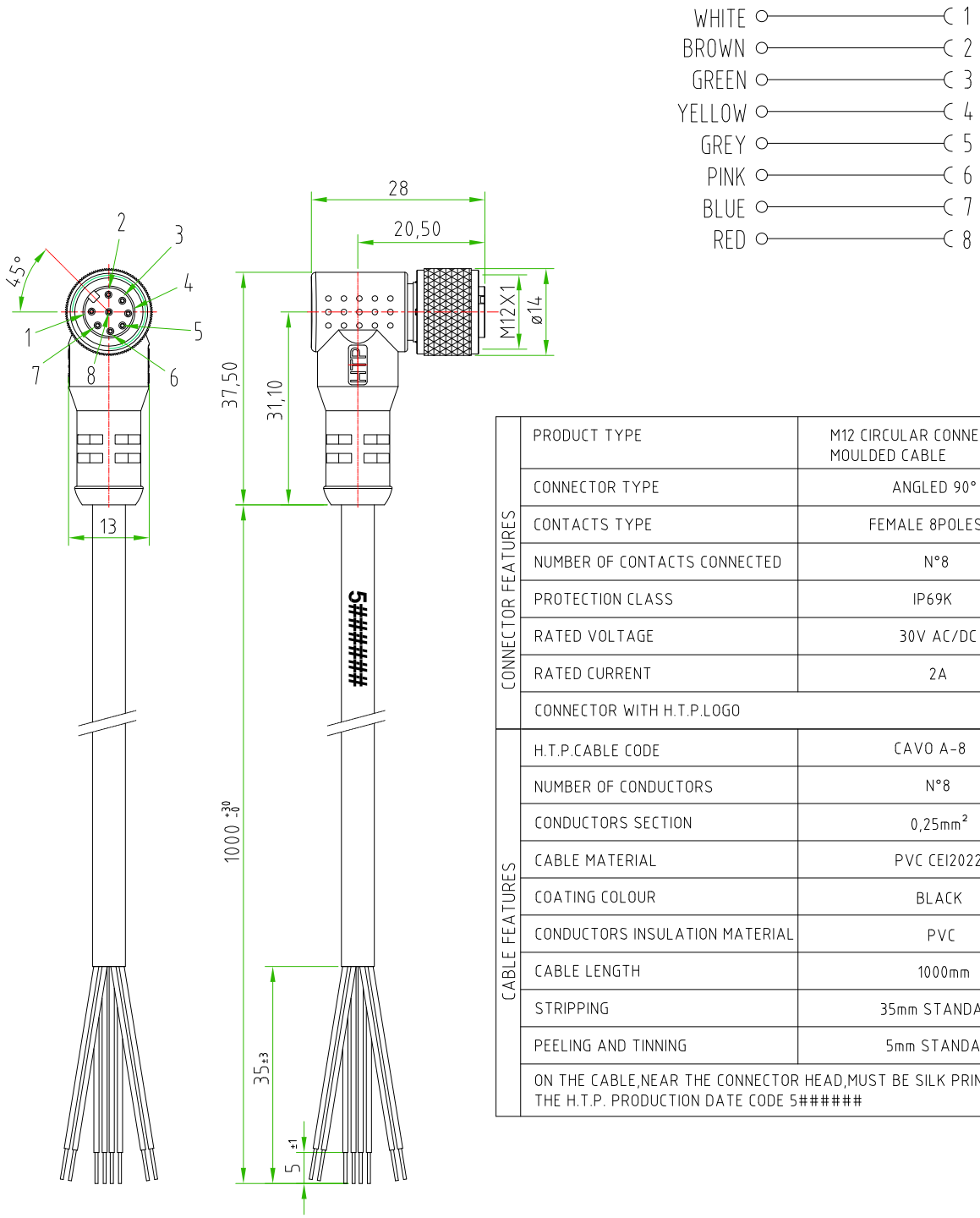

CONNECTOR FEATURES	PRODUCT TYPE	M12 CIRCULAR CONNECTOR WITH MOULDED CABLE
	CONNECTOR TYPE	ANGLED 90°
	CONTACTS TYPE	FEMALE 8POLES
	NUMBER OF CONTACTS CONNECTED	N°8
	PROTECTION CLASS	IP69K
	RATED VOLTAGE	30V AC/DC
	RATED CURRENT	2A
	CONNECTOR WITH H.T.P.LOGO	
CABLE FEATURES	H.T.P.CABLE CODE	CAVO A-8
	NUMBER OF CONDUCTORS	N°8
	CONDUCTORS SECTION	0,25mm²
	CABLE MATERIAL	PVC CEI2022
	COATING COLOUR	BLACK
	CONDUCTORS INSULATION MATERIAL	PVC
	CABLE LENGTH	1000mm
	STRIPPING	35mm STANDARD
	PEELING AND TINNING	5mm STANDARD
	ON THE CABLE,NEAR THE CONNECTOR HEAD,MUST BE SILK PRINTED THE H.T.P. PRODUCTION DATE CODE 5######	

CUSTOMER APPROVAL	
SIGNATURE	DATE
PLEASE SIGN AND RETURN	

Designer CIMMINO L.	Date 2021-08-27	Tollerance ±0.3	Units: mm	Series M12		Drawing n. 1-1
Approved SUGLIANI R.	Date 2021-08-27	Scale 1:1	Size: A4	Customer code:		

A4

HTP™ High Tech Products S.R.L.

DESCRIPTION

CIRCULAR CONNECTOR M12,FEMALE,ANGLED 90°,8POLES, WITH CABLE PVC/PVC CEI2022 8x0,25mm², BLACK COLOUR, L=1m.CONNECTOR WITH H.T.P.LOGO

H.T.P.PART NUMBER

12FA8A1Z

H.T.P. High Tech Products S.R.L. Via Lesina,45 -24030- Brembate di Sopra (Bg) - ITALY Phone:+39.035692509 Fax:+39.035203291 E-mail: info@webhtp.eu Web: http://www.webhtp.eu/

ALL RIGHTS ARE RESERVED.