

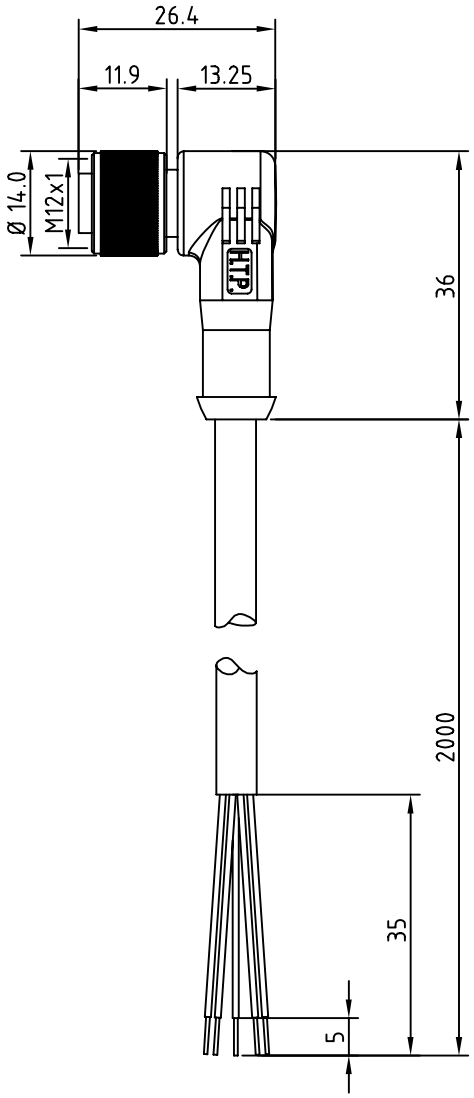

CONNECTOR FEATURES	CONNECTOR TYPE	M12
	CONTACT TYPE	FEMALE 5POLES
	CABLE LENGHT	2000mm
	PROTECTION CLASS	IP69K
	STRIPPING	35mm STANDARD
	PEELING	5mm STANDARD
	NUMBER OF CONTACTS CONNECTED	N°5
	CONNECTOR WITH H.T.P.LOGO	
CABLE FEATURES	H.T.P.CABLE CODE	Q
	NUMBER OF CONDUCTORS	N°5
	CONDUCTOR SECTION	0.25mm^2
	CABLE MATERIAL	PVC CEI2022
	COATING COLOUR	GREY
	CONDUCTOR INSULATION MATERIAL	PVC
	CABLE SHIELDED	

TOLLERANZE		DISEGNATORE LORENZO CIMMINO	DATA 15.09.10	SCALA 1:1	DISEGNO N.
U.d.M	ANGOLO	CONTROLLATO			
DESCRIZIONE M12 FEMALE 90° 5 POLES,WITH CABLE PVC/PVC,CEI2022,3X0.25mm^2,GREY,SHIELD,L=2m			TIPO M12		MATERIALE
H.T.P. HIGH TECH PRODUCTS			CODICE 12FA5Q2Z		