

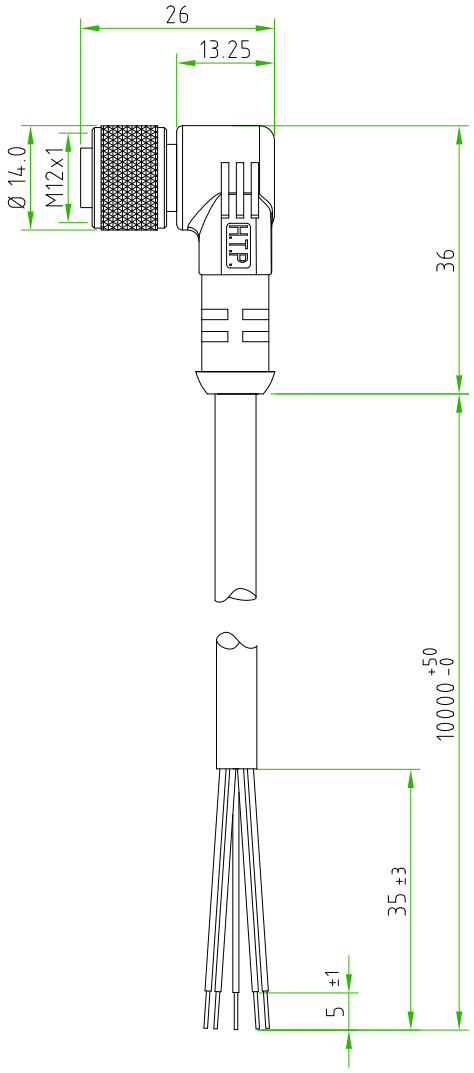

CONNECTOR FEATURES	CONNECTOR TYPE	M12 90°
	CONTACT TYPE	FEMALE 5POLES
	CABLE LENGHT	10000mm
	PROTECTION CLASS	IP69K
	STRIPPING	35mm STANDARD
	PEELING AND TINNING	5mm STANDARD
	NUMBER OF CONTACTS CONNECTED	N°5
	CONNECTOR WITH H.T.P.LOGO	
CABLE FEATURES	H.T.P.CABLE CODE	P
	NUMBER OF CONDUCTORS	n.5
	CONDUCTOR SECTION	0,25mm²
	CABLE MATERIAL	PVC UL approved
	COATING COLOUR	BLACK
	CONDUCTOR INSULATION MATERIAL	PVC

TOLLERANZE ±0.3	DISEGNATORE ROBERTO SUGLIANI	DATA 06.07.16	SCALA 1:1		DISEGNO N.
U.d.M / ANGOLO	CONTROLLATO				
DESCRIZIONE M12 FEMALE 90° 5 POLES,WITH CABLE PVC/PVC UL approved 5X0,25mm² BLACK L=10m		TIPO M12			MATERIALE
H.T.P. HIGH TECH PRODUCTS		CODICE 12FA5P10			