

CONNECTOR FEATURES	PRODUCT TYPE	EXTENSION
	CABLE LENGHT	1000mm
	M12 FEMALE 90°	5POLES
	M12 MALE 180°	5POLES
	PROTECTION CLASS	IP69K
CABLE FEATURES	H.T.P. CABLE CODE	A
	NUMBER OF CONDUCTORS	n°5
	CONDUCTOR SECTION	0.25mm^2
	CABLE MATERIAL	PVC CEI2022
	COATING COLOUR	BLACK
	CONDUCTOR ISULATION MATERIAL	PVC

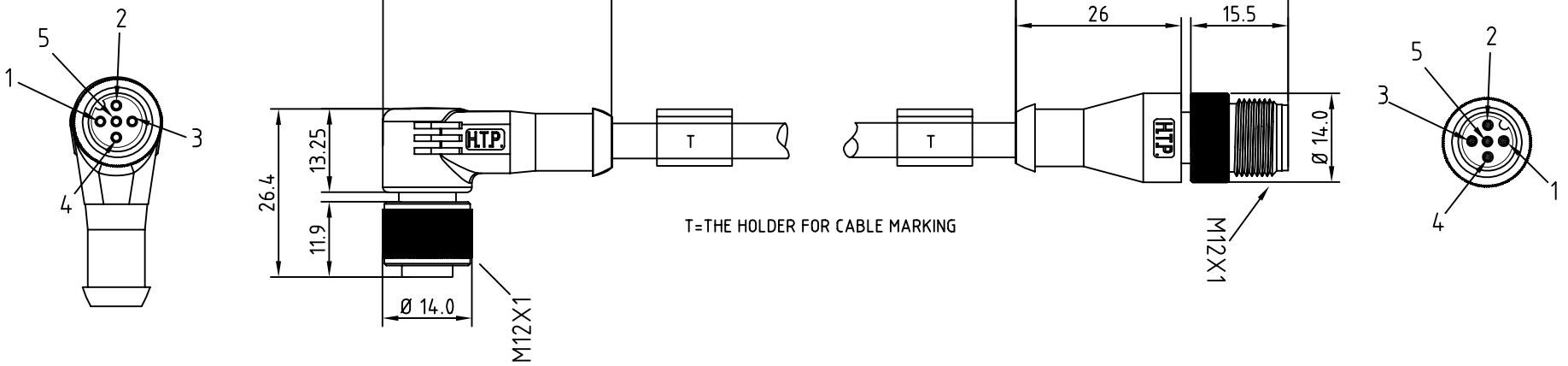

TOLLERANZE	DISEGNATORE LORENZO CIMMINO	DATA 16-04-09	SCALA 1:1		DISEGNO
U.d.M / ANGOLO	CONTROLLATO				
DESCRIZIONE: EXTENSION M12 FEMALE,ANGLED 90°,5 POLES,WITH CABLE PVC/PVC, CEI2022,BLACK,5X0,25mm^2,L=1m + M12 MALE,STRAIGHT 180°, 5POLES		TIPO: EXTENSION M12			MATERIALE
H.T.P. HIGH TECH PRODUCTS		CODICE: 12FA5A1Z12MD			