

CONNECTOR FEATURES	PRODUCT TYPE	M12-M12 EXTENSION
	CONTACT TYPE	FEMALE-MALE
	CABLE LENGHT	1000mm
	M12 FEMALE 90°	4 POLES
	M12 MALE 180°	4 POLES
	PROTECTION CLASS	IP69K
	NUMBER OF CONTACTS CONNECTED	N°4
	CONNECTORS WITH H.T.P.LOGO	
	EXTENSION WITH THE HOLDER FOR CABLE MARKING	
CABLE FEATURES	H.T.P.CABLE CODE	X
	NUMBER OF CONDUCTORS	N°4
	CONDUCTOR SECTION	0.34mm²
	CABLE MATERIAL	PUR
	COATING COLOUR	BLACK
	CONDUCTOR INSULATION MATERIAL	PVC

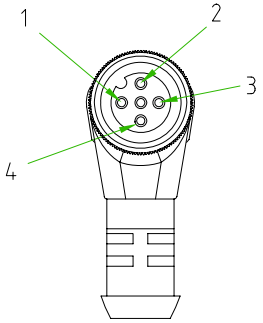

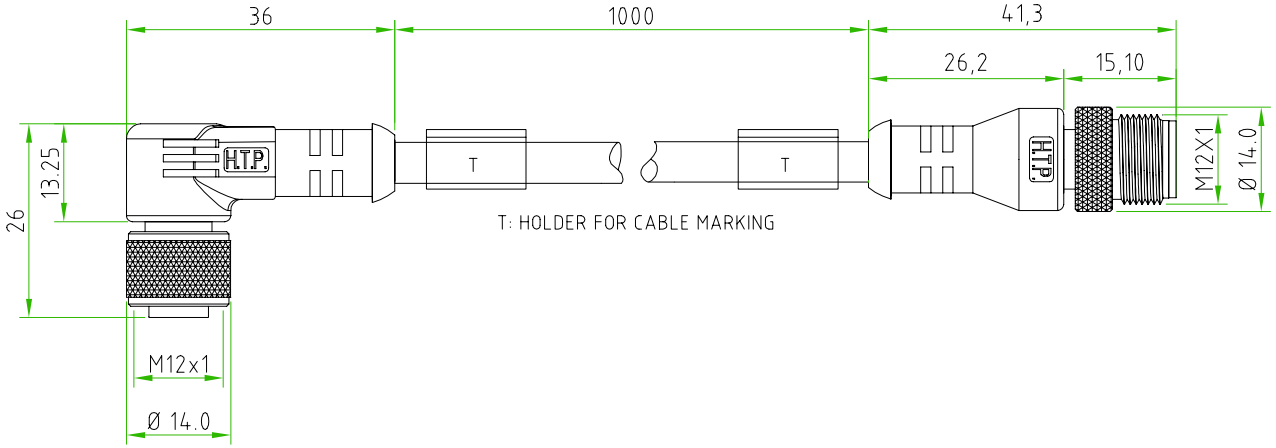

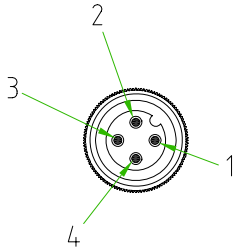

TOLLERANZE	DISEGNATORE LORENZO CIMMINO	DATA 04-07-11	SCALA 1:1		DISEGNO
U.d.M / ANGOLO	CONTROLLATO				
DESCRIZIONE: EXTENSION M12 FEMALE,ANGLED 90°,4 POLES,WITH CABLE PUR/PVC, BLACK,4X0.34mm²,L=1m+M12 MALE,STRAIGHT 180°,4POLES		TIPO: EXTENSION M12			MATERIALE
High Tech Products HTP H.T.P. HIGH TECH PRODUCTS		CODICE: 12FA4X1Z12MD			