

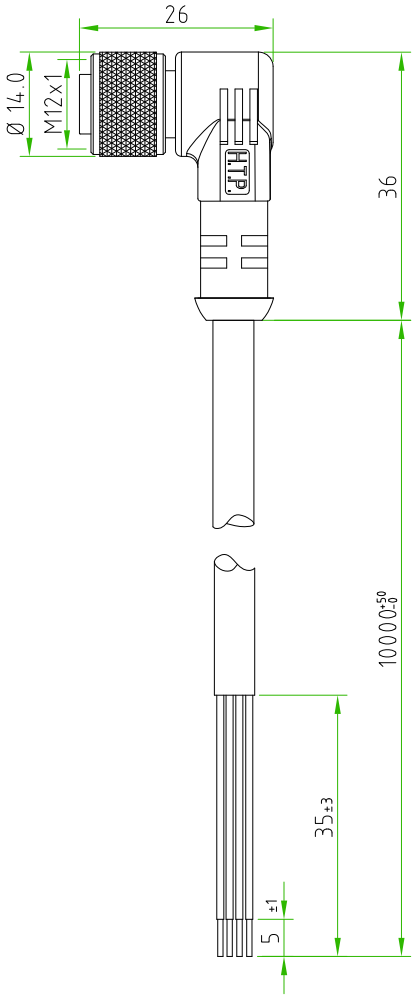

CONNECTOR FEATURES	CONNECTOR TYPE	M12 90°
	CONTACT TYPE	FEMALE 4POLES
	CABLE LENGHT	10000mm
	PROTECTION CLASS	IP69K
	STRIPPING	35mm STANDARD
	PEELING AND TINNING	5mm STANDARD
	NUMBER OF CONTACTS CONNECTED	N°4
	RATED VOLTAGE	250V AC/DC
	RATED CURRENT	4A
	CONNECTOR WITH H.T.P.LOGO	
CABLE FEATURES	H.T.P.CABLE CODE	CAVO U-4
	NUMBER OF CONDUCTORS	N°4
	CONDUCTOR SECTION	0,25mm²
	CABLE MATERIAL	PUR
	COATING COLOUR	BLACK
	CONDUCTOR INSULATION MATERIAL	PUR
	CABLE SHIELDED	

TOLLERANZE ±0.3	DISEGNATORE LORENZO CIMMINO	DATA 03-09-14	SCALA 1:1		DISEGNO N.
U.d.M / ANGOLO	CONTROLLATO				
DESCRIZIONE M12 FEMALE 90° 4 POLES WITH CABLE PUR/PUR 4X0,25mm² BLACK SHIELDED L=10m CONNECTOR WITH H.T.P.LOGO		TIPO M12			MATERIALE
High Tech Products HTP H.T.P. HIGH TECH PRODUCTS		CODICE 12FA4U10			