

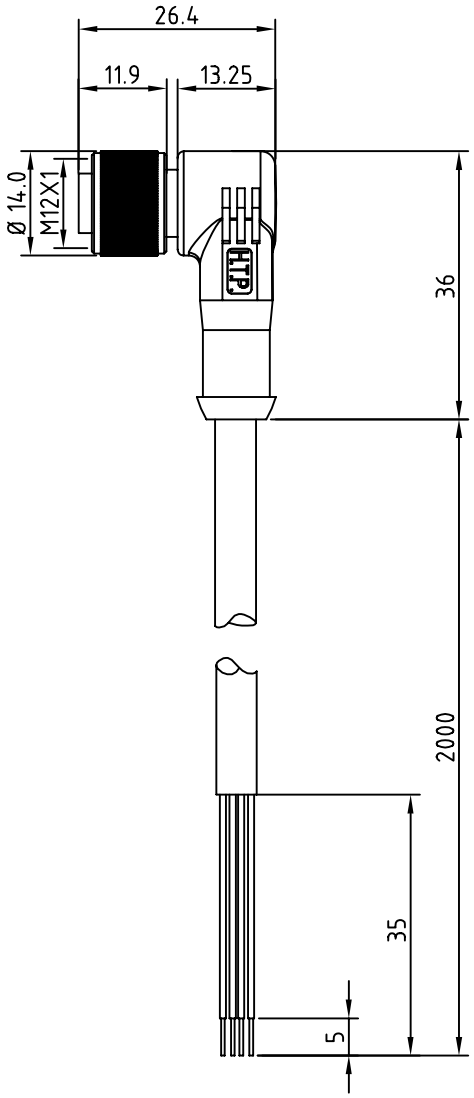

CONNECTOR FEATURES	CONNECTOR TYPE	M12
	CONTACT TYPE	FEMALE 4POLES
	CABLE LENGHT	2000mm
	PROTECTION CLASS	IP69K
	STRIPPING	35mm STANDARD
	PEELING	5mm STANDARD
	NUMBER OF CONTACTS CONNECTED	N°4
	CONNECTOR WITH H.T.P.LOGO	
CABLE FEATURES	H.T.P.CABLE CODE	L
	NUMBER OF CONDUCTORS	N°4
	CONDUCTOR SECTION	0.34mm²
	CABLE MATERIAL	PVC CEI2022
	COATING COLOUR	GREY
	CONDUCTOR INSULATION MATERIAL	PVC

TOLLERANZE	DISEGNATORE LORENZO CIMMINO	DATA 09.09.10	SCALA 1:1		DISEGNO N.
U.d.M / ANGOLO	CONTROLLATO				
DESCRIZIONE: M12 FEMALE 90° 4 POLES,WITH CABLE PVC/PVC,CEI2022,4X0.34mm²,GREY,L=2m		TIPO: M12			MATERIALE
H.T.P. HIGH TECH PRODUCTS		CODICE: 12FA4L2Z			