

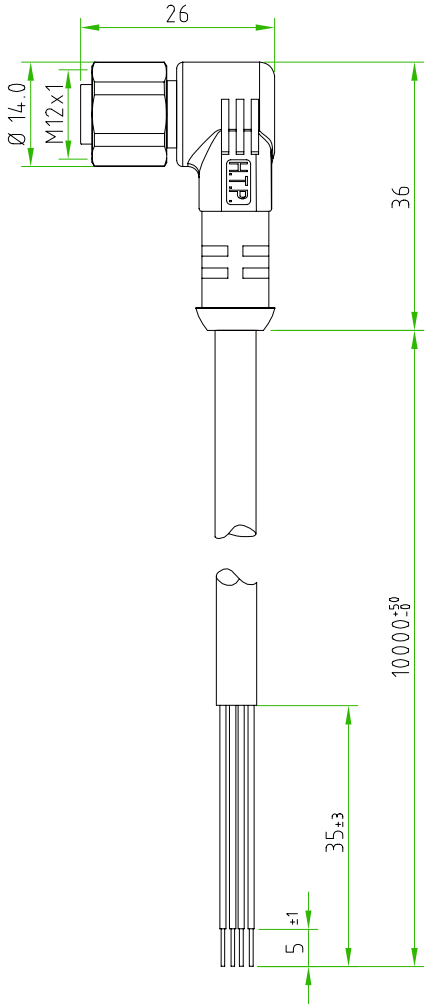

CONNECTOR FEATURES	CONNECTOR TYPE	M12 90°
	CONTACT TYPE	FEMALE 4POLES
	CABLE LENGHT	10000mm
	PROTECTION CLASS	IP69K
	STRIPPING	35mm STANDARD
	PEELING AND TINNING	5mm STANDARD
	NUMBER OF CONTACTS CONNECTED	N°4
	RATED VOLTAGE	250V AC/DC
	RATED CURRENT	4A
	CONNECTOR WITH STAINLESS STEEL NUT (AISI304)	
	CONNECTOR WITH H.T.P.LOGO	
	⚠ HEXAGONAL NUT MATERIAL:STAINLESS STEEL (AISI304)	
	CONNECTOR WITH H.T.P.LOGO	
CABLE FEATURES	H.T.P.CABLE CODE	L-4-G
	NUMBER OF CONDUCTORS	N°4
	CONDUCTOR SECTION	0,34mm²
	CABLE MATERIAL	PVC CEI2022
	COATING COLOUR ⚠	GREY RAL7040 PANTONE 429C
	CONDUCTOR INSULATION MATERIAL	PVC

TOLLERANZE ±0.3	DISEGNATORE LORENZO CIMMINO	DATA 26.08.13	SCALA 1:1		DISEGNO N.
U.d.M / ANGOLO	CONTROLLATO				
DESCRIZIONE: M12 FEMALE 90° 4 POLES,WITH CABLE PVC/PVC CEI2022 4X0.34mm² GREY RAL7040 L=10m. CONNECTOR WITH STAINLESS STEEL NUT AISI304. CONNECTOR WITH H.T.P.LOGO		TIPO: M12			MATERIALE
High Tech Products HTP H.T.P. HIGH TECH PRODUCTS		CODICE: 12FA4L10-G-INOX			